# Addendum #1 for Construction RFB

Project Name: Video Surveillance System at IVH, Marshalltown

DAS RFB #: 1816671242

DAS Project #: 8800.00

Date: 01/26/2016

**Addendum #1:**

- 7 pages: Cover page, Questions/Answers, drawing modifications, and discussion during pre-proposal meetings
- 1 pages: Public notice revised bid bud date. to 2/4
- 2 pages: Meeting agendas from 1/20/16 pre-bid meeting
- 2 pages: Sign in sheets from 1/20/16 pre-bid meeting
- 66 pages: Approved substitution requests
- 17 pages: Drawing modifications
- All questions are to be submitted by noon on Friday 1/29. No further product substitution requests will be reviewed/accepted.

**Questions/Answers:**

Q. On the Section 27 66 00 page 9 of the PDF file under 2.09 VMS Health Monitor, it stated as below:

- The Contractor shall provide, install and configure health monitoring software to be installed on each server running the VMS or a service required for the VMS operation like a SQL server.
- The Server Monitoring Service shall be a Windows service that automatically launches at system startup, irrespective of whether a user is logged in not.
- The health monitoring service shall notify the system administrators of any problem or maintenance required.
- Health events shall be able to create SNMP strings.

Does this mean to install the software on a PC?

A. No, this should be a component of the VMS that can notify the Owner of an issue even if the serve is offline.

Q. On the Section 27 66 00 page 11 of the PDF file under C. VMS Recording Server, it mentioned:

1. The servers shall be an enterprise grade server with the minimum following specifications

d. Live video drive (Milestone only) - enterprise class 300gb, 15K RPM SAS hard drives in a RAID 10 configuration

6. Manufacturer:
   a. BCD Video
   b. Or approved equal

Does this one take substitute?

A. The server for the system shall meet the specifications, be non-proprietary and shall be guaranteed to meet the system performance requirements.

Q. Are any of the building in which work is taking place on the historical registry.

A. None of the buildings on the Veterans Home Campus are on the historical registry.

Q. Will their being any fiber installation required.

A. As identified on the prints, the installation of fiber will be required for some cameras at Heinz Hall due to exceeding the recommended lengths to the IT closets. Please refer to the project drawings for additional information.

Q. Will there be a location on site for storage.

A. Contractors shall provide their own secure and weatherproof storage. A location in the gravel on the North side of campus will be allocated for the placement of a trailer or job box.

Q. Are their specific noise control requirements?

A. Any disruptive noise shall be coordinated with the Construction Manger 24 hrs. prior to work taking place. Please refer to the Special and General Work Requirements for additional information.

Q. If views into resident rooms are to be blocked out there may be a concern with the rooms at the ends of the wings in Malloy and Dack, as blocking out these rooms may also block out desired views. Please advise.

A. Relocate Dack & Malloy cameras per attached revised drawings.

Q. Can one single server unit fulfill your requirements for VMS and storage?

A. Yes, depending on the systems architecture and manufacturer's recommendations. Systems that require a management server should utilize multiple servers so the management server is dedicated to its function.

Q. Could two servers be used, one for VMS and one for storage?

A. Yes, depending on the systems architecture and manufacturer's recommendations.

Q. Are you looking for SD edge storage to be installed on the cameras themselves?

A. No.

Q. Will Cameras looking down the hallway past doors at a room are going to be repositioned at the end of the hallway?

A. Refer to revised drawings attached to addendum.

Q. We have heard of two different dates for the deadline, please confirm exact date to complete the project?

A. refer to the contract documents or be specific about where dates conflict.

Q. If asbestos removal or switch additions become necessary mid-project, how will that impact the end date / deadline?

A. In the event asbestos is encounter work in that area shall stop until area is tested and cleared. While area is shutdown contractor is to relocate to another are to continue camera installation. If additional switches are needed in an area during installation contractor is to coordinate with Construction Manager and IVH IT personnel. While additional switches are being installed contractor is to relocate to another are to continue camera installation.

Q. Must installation times be during normal business hours; or can installs be done on nights and weekends? A. refer to the contract documents or be specific about where dates conflict.

A. Work is to take place during Iowa Veterans Home normal business hours which are 7:00am-3:30pm M-F.

Q. Will all switches provided for the project by IVH have enough port availability and Power necessary to accommodate the cameras added to the system?

A. Yes, all networking equipment is provided and installed by IVH.

Q. Will the switches be pre-configured for the system prior to the installation?

A. Yes, IVH is responsible for all configuration. The Contractor is to provide all network required information as identified in the specification.

Q. Are contractors required to provide an "OCP" insurance policy since the Contractor will not be building new walls?

A. Liability insurance is required.

Q. Will public area restrooms be available for Contractor and Subs?

A. Yes.

Q. Please clarify the 15-year Warranty is this for parts/cabling only? Not aware of any manufacturer that will provide a 15-year warranty guarantee as models change.

A. This is a structured cabling warranty.

Q. Are there any analog cameras not listed on the diagrams that will integrate with the system?

A. No.

Q. Are contractors able to use IVH restrooms or contractors needs to provide their own?

A. Contractors are able to use IVH public restrooms.

Q. Will every interior and exterior camera require a Transtector TSK GbE POE (1101-994) and a Transtector ALPU POE 60M (1101-933) as referenced on page 18 of Section 27 66 00.

A. Only exterior cameras, and cameras that will have their cabling going into the exterior will require the referenced Transtector equipment.

**Substitution Requests:**

- Approved: (Requests included at end of addendum)
    - Avigilon HD Multisensor Dome Camera model numbers 12W-H3-4MH-DC1(in ceiling), 12w-h3-4MH-DO1 (Outdoor), 12W-H3-4MH-DP1 (pendant) for the Arecont AV 12176DN-NL camera
    - (Accepted only if it is the Enterprise Level) Avigilon ACC Network Video Management Software for the VMS
    - Axis P3224-LVE camera type 1IR and Axis P3225-LVE camera type 2IR.

- Not Approved: (Requests included at end of addendum)
    - Avigilon1.0C-H3A-DO1 for Samsung SNV-5084 – *this does not meet the minimum WDR specification of 120db.*
    - Type 2 Avigilon 1.0c-H3A-DO1-IR for Samsung SNV-5084R – *this does not meet the minimum WDR specification of 120db.*
    - Type 3 Avigilon 2.0C-H3A-DO1 for Samsung SNV-6084 – *this does not meet the minimum WDR specification of 120db.*
    - Type 3 Avigilon 2.0C-H3A-DO1-IR for Samsung SNV-6084R – *this does not meet the minimum WDR specification of 120db.*
    - DNF Security – Falcon Series video viewing, video storage and video recording appliance - *This spec sheet on the server does not appear to meet the minimum specifications. If the server can support Intel Xeon processors, registered ECC ram and quad NIC ports then it can be accepted.*
    - Axis P3214 – VE – *this does not meet the minimum WDR specification of 120db.*
    - *Axis P3215 VE- this does not meet the minimum WDR specification of 120db.*
    - Bosch NDN-40012-V3 - *this does not meet the minimum WDR specification of 120db.*

- Bosch NDI-40012-V3 - *this does not meet the minimum WDR specification of 120db.*
- Bosch NDN-50022-V3 - *this does not meet the minimum WDR specification of 120db.*
- Bosch NDI-50022-V3 - *this does not meet the minimum WDR specification of 120db.*

**General Discussion:**

Construction –

- Preference is to install and bring online the head end equipment first. Doing so would allow cameras to be brought online and viewable as installation progresses.
- Network switches will be provided by IVH.
- Cameras will be on a separate VLAN from campus computer network.
- Network uses a fiber backbone.
- Cameras designations on plans –
  - N = New camera
  - D = Demo camera and provide cover at rough-in
  - E = Existing camera to demo and replace
- Complete installation in one building shall be completed prior to moving to the next.
- All cameras are to utilize power over Ethernet.
- VMS shall be an enterprise based system.
- All cameras are to utilize power over Ethernet. With the exception of cameras that shall utilize hybrid fiber/copper Ethernet extenders, or cameras noted to require a power supply to be installed in the cameras TR.

Administrative -

- Daily logs to be submitted within 24 hours to DCI Group.
- Per VA grant requirements it will be the responsibility of the contractor to submit the following prior to the completion of construction:
  - A final equipment list (prior to completion of construction). A separate, complete itemized list to include all fixed and other equipment by category with the cost (not including labor and install), quantity, and placement in accordance with the involved final drawings.
  - Fixed equipment included in the construction or acquisition contract. Fixed equipment must be permanently affixed to the building or connected to the heating, ventilating, air conditioning, or other service distributed through the building via ducts, pipes, wires, or other connecting devices. Fixed equipment must be installed during construction.

**Drawing Modifications:**

1. Refer to drawing T201.2:

   - Move camera N2-1-01 to west end of corridor and view down corridor.
   - Move camera N2-1-04 to south end of corridor and view down corridor.
   - Move camera N2-1-05 to east end of corridor and view down corridor.
   - Camera N2-1-02 shall have power supply installed in camera's TR and power cable run to camera from the power supply.
2. Refer to drawing T201.3:

   - Move camera N3-1-01 to west end of corridor and view down corridor.

- Move camera N3-1-03 to south end of corridor and view down corridor.
- Move camera N3-1-04 to east end of corridor and view down corridor.

3. Refer to drawing T201.4:

- Move camera N4-1-01 to west end of corridor and view down corridor.
- Move camera N4-1-03 to south end of corridor and view down corridor.
- Move camera N4-1-04 to east end of corridor and view down corridor.

4. Refer to drawing T202.3:

- Camera E1-7-14 relabeled to E1-7-34.

5. Refer to drawing T203.3:

- Fiber/Power Enclosure type changed to NEMA 4.

6. Refer to drawing T205.3:

- Camera N1-5-03 shall have power supply installed in camera's TR and power cable run to camera from the power supply.
- Camera N1-5-07 shall have power supply installed in camera's TR and power cable run to camera from the power supply.

7. Refer to drawing T205.4:

- Move camera N2-5-01 to west end of corridor and view down corridor.
- Move camera N2-5-03 to east end of corridor and view down corridor.

8. Refer to drawing T205.5:

- Move camera N2-5-07 to west end of corridor and view down corridor.
- Move camera N2-5-09 to east end of corridor and view down corridor.

9. Refer to drawing T205.6:

- Move camera N3-5-01 to west end of corridor and view down corridor.
- Move camera N3-5-03 to east end of corridor and view down corridor.

10. Refer to drawing T205.7:

- Move camera N3-5-07 to west end of corridor and view down corridor.
- Move camera N3-5-09 to east end of corridor and view down corridor.

11. Refer to drawing T205.8:

- Move camera N4-5-01 to west end of corridor and view down corridor.
- Move camera N4-5-03 to east end of corridor and view down corridor.

12. Refer to drawing T205.9:

- Move camera N4-5-07 to west end of corridor and view down corridor.
- Move camera N4-5-09 to east end of corridor and view down corridor.

13. Refer to drawing T206.0:

- Camera NB-3-01 note changed to "SURFACE MOUNT CONDUIT TO NEAREST ACCESSIBLE CABLE PATHWAY".
- TR called out on Rack in IT SOUTH.

14. Refer to drawing T206.1:

- Camera N1-3-06 shall have power supply installed in camera's TR and power cable run to camera from the power supply.
- TR called out in other pipe chase.

15. Refer to drawing T500:

    - All exterior camera details with gooseneck, a bead of caulk noted to be placed around top 3 edges of gooseneck at connection with wall.
    - All camera details mounted directly to J-Box, noted that J-Box shall have single gang or dual gang plaster ring depending on manufacturer's requirements.
    - All camera details with conduit stubbing into camera from local J-Box, noted that conduit stub shall be PVC coated FMC.
16. Refer to drawing T501:

    - Details 2, 3, and 4 removed.
    - Camera drop tile ceiling detail added.
    - Camera flush mount to finished ceiling/wall detail added.
    - Camera gooseneck flush mount to finished wall detail added.
    - Camera gooseneck flush mount to concrete/block wall detail added.
    - Hybrid fiber/power detail added.
17. Refer to drawing T600:

    - Camera E1-3-06 changed to N1-3-06.

PUBLIC NOTICE
Iowa Veterans Home, Marshalltown, IA, Video Surveillance
IOWA DEPARTMENT OF ADMINISTRATIVE SERVICES
Request for Bids, RFB #1816671242

Addition of a campus wide video surveillance system at the Iowa Veterans Home in Marshalltown, IA. Includes, but not necessarily limited to, cameras, cabling, video management software, storage, and head end equipment.

Bid Package #1 Video Surveillance

Base Bid
- Installation of security cameras, cabling, storage, video management software, and head end equipment at the Iowa Veteran's Home campus in Marshalltown, Iowa.

Unit Prices
- Additional cameras
- Cabling
- Licenses
- Warranty
- Technician Hourly Rate
- Programmer Hourly Rate

Target dates: Project Awarded February 4th, 2016, Substantial Completion June 30th, 2016.

**Sealed bids will be received on or before 2:00 PM (Central Time) Thursday, February 4th, 2016** at the Iowa Department of Administrative Services, GSE-Procurement Services, Hoover State Office Building, Level 3, 1305 E Walnut Street, Des Moines, Iowa 50319-0105. Late bids or faxed bids and bids printed off the DAS internet site will not be considered and shall be returned to the bidder unopened.

**A Site Tour / Pre-Bid Conference will be held Wednesday, January 20th 2016, at 10:00 AM.** Please meet at the entrance to the Sheeler building at the Iowa Veterans Home, 1301 Summit St, Marshalltown, IA 50158. A map is included as part of Section 00 2513.

Bid security (5% of the bid amount) is required, in the form of a bid bond (preferred) or certified/cashiers check payable to the IA Dept of Administrative Services.

Specifications and Bid Forms for the project are available at Rapids Reproduction, Inc. at 3976 NW Urbandale Drive, Urbandale, Iowa 50322, Ph 515-251-3222. Alternatively, Bid Documents can be viewed online at http://www.rapidsrepro.com/. Project Documents will be loaned to qualified bidders upon receipt of either a Master Builders of Iowa non-cash deposit card, or a check for twenty dollars ($20.00) per set. Deposit checks will be refunded if documents are returned to Rapids Reproduction, Inc. within fourteen (14) days after the bid due date. Checks are to be made out to Rapids Reproductions.

For further information, contact:
David Cross, Purchasing Agent III
Iowa Department of Administrative Services
GSE- Procurement Services
Hoover Building - Level 3
ph (515) 725-2893
email: david.cross@iowa.gov

**Pre-Proposal Meeting: January 20th, 10:00 AM**

**Owner/DAS/CM Team Introductions:**
Facility – Iowa Veterans Home
Construction Manager – DCI Group
Iowa Department of Administrative Services (DAS) – Jennie Elliott
DAS Purchasing Agent – David Cross

**General Project Description/Overview:**
Installation of security cameras, cabling, storage, video management software, storage, and head end equipment.

**Tour –** Lead by IVH and DCI Group
**Bid Package Process:**
Overview of Instructions to Bidders – DCI Group

PROPOSALS DUE: Thursday, January 28th, 2:00 PM

MAKE SURE IT IS SUBMITTED TO DAS AS THE REQUEST FOR PROPOSALS READS

1. Proposal Process
    a. All questions need directed to David Cross as identified in Public Notice
    b. Bid Form, Non-Discrimination Clause, TSB form, and Bid security
    c. All questions after this meeting and prior to January 22nd at 2:00 PM to be submitted to David Cross at david.cross@iowa.gov. Do not contact IVH or DCI Group directly for questions.
    d. All substitution requests must be submitted to David Cross by end of day Friday the 22nd for consideration.
    e. Proposals may be accepted as base bid only or a combination of base bid and add or deduct of unit prices.
2. Schedule
    a. Questions due January 29th by 12:00pm CST
    b. An addendum will be issued this week following the today's Pre-Proposal Meeting
    c. Final addendum will be issued no later than January 26th by 2:00 PM CST or no later than 48 hours prior to proposals being due.
    d. Proposals due January 28th by 2:00 PM CST
    e. Tentatively an NOI will be issued January 29th.
    f. Anticipated construction work to take place February 5th, 2016 through July 8th, 2016

**Scope of Work:**

3. Administrative
    a. This project is partially federally funded and therefore will require the adherence to David Bacon wage requirements.
    b. Identification of classification is the responsibility of the bidder. An updated wage decision has been provided with the bid documents. If a new wage decision is issued prior to bid it will be provided via addendum.
    c. EADOC project management software
    d. Pre-construction meetings and submittals

4. Construction
    a. The complete procurement and installation of all systems as identified in the construction documents to be the responsibility of this contractor.
    b. All areas shall be clean and put back to existing conditions prior to moving on to the next.
    c. All penetrations and sealing/fireproofing/acoustical sealant of penetrations is the responsibility of this contractor.
    d. Staging and storage of materials.
    e. Contractor to turnover to IVH existing cameras and devices to be removed.
    f. Contractor shall maintain accurate as-built construction records throughout the project.
    g. Daily logs/Weekly Report and meeting requirements.
    h. Technical requirements - Elert
5. Close Out
    a. To meet VA requirements, Contractor is to provide finalized equipment list with cost, quantity, and locations.
    b. Organize and direct the training of O&M personnel. Training to be audio-video recorded by the contractor..
    c. Complete, clean, and legible copies of the as-built construction records to be provided to DCI Group upon completion of work. Electronic and hard copies of all O&M's and as-built drawings to be submitted.
    d. As-built documents are required in AutoCAD and PDF format.
    e. All test results and end user software to be submitted to DCI Group
    f. Review Section 27 00 00 for additional requirements.
    g. Response ties for warranty corrections Section 27 00 00 3.24.E
        i. Emergency – 2 hours for remote service. If remote service does not correct the issue, within 4 hours of notification on-site service shall be provided.
        ii. Normal service calls – 24 hours for remote service. If remote service does not correct the issue, within 48 hours of notification on-site service shall be provided.
        iii. Emergency repairs or replacements shall be guaranteed within twelve (12) hours.

**IVH Worksite Rules**

1. All personnel to check in at the Sheeler building each morning to receive contractor's badges and check them back in at the end of each work day.
2. Michael Steen with DCI Group will be onsite and your main point of contact.
3. An IVH representative will assist in moving furniture and gaining access to occupied areas where applicable.
4. IVH will tag out the system each day in the areas work is being performed.
5. All tools, ladders, materials, and equipment should be in constant view. If a contractor is working above ceiling all tools and etc. should be locked and stored away or another employee should be in the area to watch all tools and etc.
6. Do not allow residents to follow you into construction areas.
7. It is of the upmost importance to show respect and courtesy to all residents and staff at all times.
8. Clean all debris, materials, and bring all finishes back to existing conditions in the area they were working in prior to moving to the next area.
9. All work should be fully completed in one area prior to moving to the next or leaving for the day.
10. No smoking or smokeless tobacco use onsite

**Open Discussion**

DCI Group

**DAS Project Name:** **IVH – Video Surveillance System**

**Meeting Purpose:** **Pre-Proposal Meeting**

**Date:** **01/20/2016**

## Attendees

| In Attendance (Initial) | Name | Company | Phone Number | E-Mail Address |
|---|---|---|---|---|
| X | Michael Steen | DCI Group | 515-975-8384 | MichaelS@dcigroupia.com |
| X | Michael Martin | DCI Group | 515-393-1851 | MichaelM@dcigroupia.com |
| | David Hokel | DCI Group | 515-979-3187 | DavidH@dcigroupia.com |
| | Chris Hartman | EECO | 515-229-0680 | Chartman@connectingyou.com |
| | Anita Messerschmidt | EmbarkIT | 515-440-1451 | anita@embarkit.com |
| | Richard Otto | EmbarkIT | 515-440-1451 | rich@embarkit.com |
| | Gerson Carrillo | EmbarkIT. | 515 440 1451 | gerson@embarkit.com |
| VIA | Sam Al Kadri | 911 security cam | 414-428-0581 | sam@911securitycameras.com |
| | Eric Stroud | Waldinger | 515-346-7505 | eric.stroud@waldinger.com |
| | Glenda Durst | C13 | 515-314-5745 | gdurst@ci3.com |
| | Nathan Miedema | 4 Media | 515-321-8661 | nmiedema@4mediagroup.com |
| | Howard Spencer | Wolin | 515-243-5911 | hspencer@wolin.com |

DCI Group

| In Attendance (Initial) | Name | Company | Phone Number | E-Mail Address |
|---|---|---|---|---|
| | JEFF ROBINSON | ABC | 515-202-8098 | JROBINSON@ABCELECTRIC.com |
| | TIM MITCHELL | Sight + Sound | (913) 215-2770 | TIMsightandSound@gmail.com |
| | Pat Smith | Walsh | 515 777 7277 | Psmith@walshsecurity.com |
| | Tim Hudson | UMT | 515 724 1787 | thudson@vanmaanenelectric.com |
| | Josh Harris | CEC | 515-289-3707 | jharris@ceeinfo.com |
| | Ron Ischer | WALSH | 515-783-3525 | Ron@rhttech.net |
| | Cody McCormick | CI | 515 264-7584 | Cmccormick@gotoci.com |
| | Adam Borndt | CI | SAME | SAME |
| | Mike Hunter | Baker | 285-6774 | MHunter@Bakerelectric.com |
| | Russell Whitney | DCI Group | | |
| | | | | |
| | | | | |
| | | | | |
| | | | | |
| | | | | |
| | | | | |
| | | | | |
| | | | | |

January 19, 2016

Tom Pavek
Elert & Associates
140 Third St.
Stillwater, MN 55082

Jennie Elliott
Owner Representative
109 SE 13th Street
Des Moines, IA 50319

Dear Jennie and Tom:

Thank you for the opportunity to be of service to you. I have prepared the following request to substitute Avigilon HD Multisensor Dome Camera model numbers 12W-H3-4MH-DC1(in ceiling), 12w-h3-4MH-DO1 (Outdoor), 12W-H3-4MH-DP1 (pendant) for the Arecont AV 12176DN-NL camera for the Iowa Veterans Home Video Surveillance System RFB No. 1816671242 DAS Project No. 8800.00 for your consideration.

**Reasons**

- Avigilon cameras have three year warranty with advance exchange
- Avigilon cameras are made in Texas, USA
- Onvif Compliant
- Remote zoom and focus 2.8-8mm lens (no need to change lenses)
- Individually placed cameras in flexible configurations
- One license per unit required
- PoE
- Works well with Avigilon VMS
- Auto firmware updates with Avigilon ACC

**Datasheets attached**

**Cost impact to owner:**

- No yearly fees, three year warranty with advance exchange, free tech support from factory.

If you have any questions, please don't hesitate to call me at 515-528-1066.

Sincerely,

Lou Kelleher
Sales Manager
Inteconnex
6200 Aurora Ave. # 608W
Urbandale, IA 50322
515-528-1066
lkelleher@inteconnex.com

January 19, 2016

Tom Pavek
Elert & Associates
140 Third St.
Stillwater, MN 55082

Jennie Elliott
Owner Representative
109 SE 13th Street
Des Moines, IA 50319

Dear Jennie and Tom:

Thank you for the opportunity to be of service to you. I have prepared the following request to substitute Avigilon ACC Network Video Management Software for the VMS for the Iowa Veterans Home Video Surveillance System RFB No. 1816671242 DAS Project No. 8800.00 for your consideration.

**Reasons**

- Avigilon Control Center has no yearly fees and unlimited free viewing clients
- User interface is very easy to use and learning curve is minimal
- Investigation tools and video search are very intuitive thus increasing productivity
- Mobile apps are free
- Bandwidth can be fine- tuned to optimize image quality and network bandwidth availability.
- Intelligent Virtual Matrix is included

**Datasheets attached**

**Cost impact to owner:**

- No yearly fees, free client licenses, free tech support from factory.

If you have any questions, please don't hesitate to call me at 515-528-1066.

Sincerely,

Lou Kelleher
Sales Manager
Inteconnex
6200 Aurora Ave. # 608W
Urbandale, IA 50322
515-528-1066
lkelleher@inteconnex.com

# Avigilon Control Center software with HDSM™ Technology

AVIGILON CONTROL CENTER

Avigilon™ Control Center (ACC) is the industry's easiest-to-use video management software, and has revolutionized how security professionals manage and interact with high definition video. As a distributed network platform with enterprise-class reliability, Avigilon Control Center is able to efficiently capture, manage and store high definition surveillance video while intelligently managing bandwidth and storage. Avigilon Control Center can be pre-installed and configured on an Avigilon™ High Definition Video Appliance, Network Video Recorder (NVR) or work as stand-alone software, to meet the needs of any type of installation.

Avigilon Control Center records and manages both video and audio from Avigilon's line of megapixel cameras (from 1 – 5 MP and 4 – 7K based on horizontal resolution). ACC can seamlessly integrate conventional analog cameras, along with a broad range of third-party IP cameras and encoders, giving you the ability to build a hybrid system – providing you with a budget-conscious migration from analog to digital. ACC's easy-to-use interface allows personnel to evaluate and respond to events with minimal training.

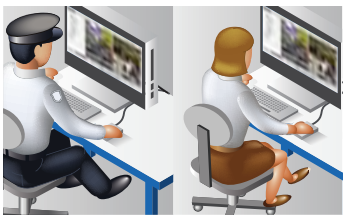

COLLABORATIVE INVESTIGATIONS

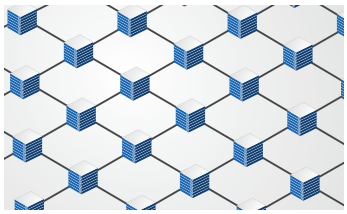

ENTERPRISE SERVER MANAGEMENT

INTELLIGENT VIRTUAL MATRIX

Avigilon Control Center uses our unique patented HDSM™ software technology to efficiently compress and preserve image quality while intelligently managing HD image transmission throughout the Avigilon system — sending only the requested portions of captured images to operator workstations. This technology delivers the best possible image quality while providing immediate savings in transmission bandwidth allowing operators to use less powerful workstations and thereby reducing costs. Our HDSM technology leverages leading imaging, hardware, data compression and information technologies to maximize performance of the Avigilon system.

## KEY FEATURES

- Easiest-to-use interface on the market
- Collaborative investigations
- Crash-proof enterprise server management
- Centralized system administration
- Intelligent virtual matrix
- Multi-megapixel high dynamic range image display
- Data protection and storage management
- Integrated graphic mapping for system layout
- HD recording and playback timeline
- Bandwidth management and remote viewing
- Bookmark and export HD surveillance footage
- Advanced video search

## Advanced Control Center Features

***Alarm Escalation***

• Allows the creation of complete end-to-end workflows for the monitoring, assignment, and acknowledgement of alarms.

***ACC Mobile***

• Provides push alarm notifications, access to live and recorded video, and integrated audio talkdown from Android and iOS mobile devices.

***POS Transaction Engine***

• Link HD surveillance footage (viewed instantly) with transaction data to address compliance requirements and reduce shrinkage and theft.

***License Plate Recognition***

• Detects specific regional license plates as they appear in the camera field of view to monitor vehicle traffic.

***Self-Learning Video Analytics***

• Configure custom video analytics based events as alarm and rule triggers.

***Acquisition Manager***

• Ensures that all Avigilon™ cameras, regardless of resolution, are always configured to collect the best possible image over a wide range of lighting conditions.

***Simple Camera and Server Installation***

• Unique plug-and-play capabilities for NVRs and cameras automatically identify themselves on the network, without manual configuration or searching—eliminating complex network configuration.

***Detailed Management, Monitoring, and Reporting of System Status and Security***

• Detailed logs of storage, network, and overall system status to ensure the highest possible system uptime for critical applications.

***Scalable Integration with Legacy Systems***

• Distributed architecture features a .NET-based API that can easily be integrated with other systems, such as access control and building management.

## System Architecture

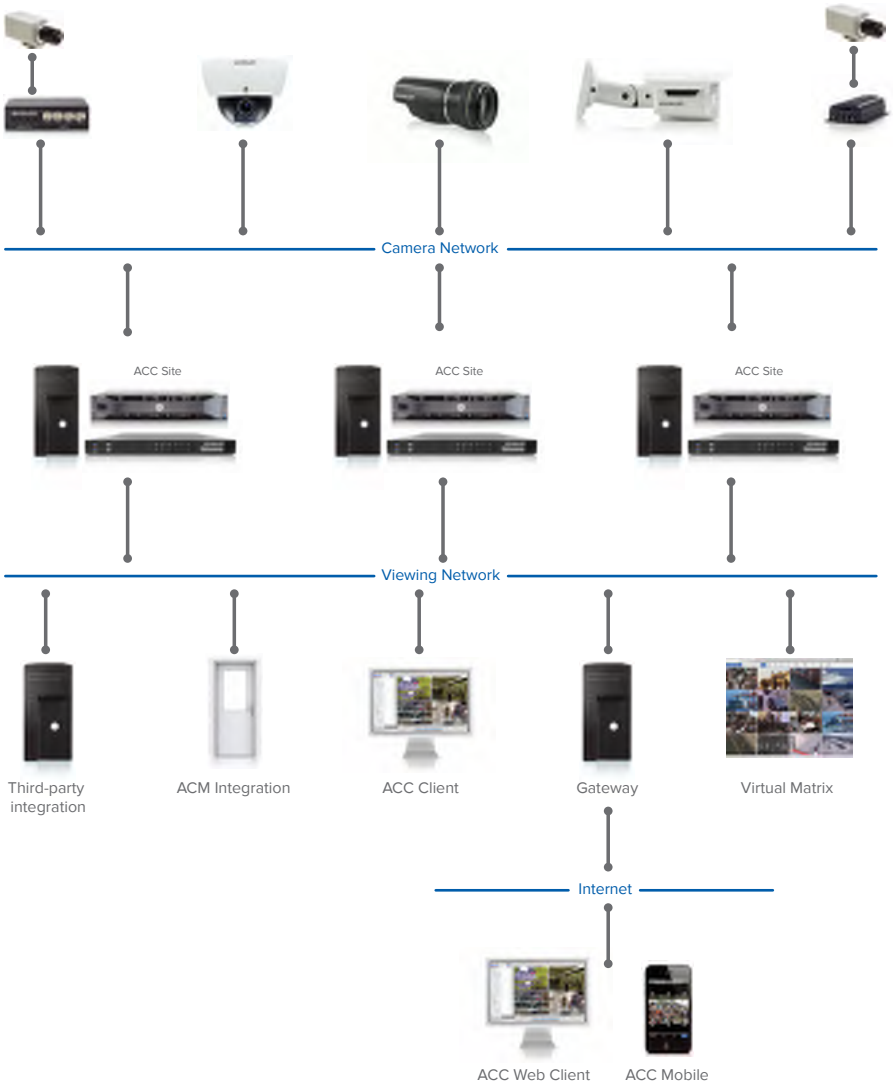

## CORE, STANDARD & ENTERPRISE

To create the best-matched system for your surveillance needs, the Avigilon Control Center software is offered in three editions: Core, Standard and Enterprise. The Enterprise edition includes more advanced features for a sophisticated solution, whereas the Standard edition is used for more focused needs or for those looking to transition to HD surveillance in the most cost-effective way. ACC Core is an entry-level version of our award-winning software that delivers advanced high definition surveillance capabilities, ease of use, and superior image quality to smaller implementations. No matter what the size of your installation, you can customize a solution that is right for you.

| System | Core | Standard | Enterprise |
|---|---|---|---|
| Number of cameras per server | 24 | 48 | 128 |
| Number of servers per site | 1 | 1 | 100 |
| Number of client licenses per server | 2 | 5 | Unlimited |
| High Definition Stream Management (HDSM)™ | Yes | Yes | Yes |
| Industry's most powerful VMS engine | Yes | Yes | Yes |
| **Device Support** | **Core** | **Standard** | **Enterprise** |
| Automatic device discovery | Yes | Yes | Yes |
| Third-party IP cameras & encoders | Yes | Yes | Yes |
| ONVIF cameras & encoders | Yes | Yes | Yes |
| Rialto™ analytics appliances | Yes | Yes | Yes |
| HD cameras with self-learning video analytics | Yes | Yes | Yes |
| HD, HD H.264, HD panoramic cameras | Yes | Yes | Yes |
| Avigilon encoders | Yes | Yes | Yes |
| H.264 support | Yes | Yes | Yes |
| MPEG4 support | Yes | Yes | Yes |
| MJPEG support | Yes | Yes | Yes |
| JPEG2000 support | Yes | Yes | Yes |
| HD professional cameras | No | No | Yes |
| **Client** | **Core** | **Standard** | **Enterprise** |
| Powerful, easy-to-use client interface | Yes | Yes | Yes |
| Self-learning video analytics overlay | Yes | Yes | Yes |
| Web browser client interface | Yes | Yes | Yes |
| Joystick support | Yes | Yes | Yes |
| ACC Mobile / Gateway | Yes | Yes | Yes |
| Saved views | No | Yes | Yes |
| Maps | No | Yes | Yes |
| Web pages | No | Yes | Yes |
| Windows user authentication | No | No | Yes |
| Editable Site View | Yes | Yes | Yes |
| Intelligent Virtual Matrix | No | No | Yes |
| Collaborative investigations | No | No | Yes |
| **Recording, Searching and Playback** | **Core** | **Standard** | **Enterprise** |
| Hourly configurable recording schedule | Yes | Yes | Yes |
| Loss-less recording | Yes | Yes | Yes |
| Intelligent motion search | Yes | Yes | Yes |
| Thumbnail search | Yes | Yes | Yes |
| Event search | Yes | Yes | Yes |
| Multi-camera export | Yes | Yes | Yes |
| Live export | Yes | Yes | Yes |
| POS transaction search | No | Yes | Yes |
| Alarm search | No | No | Yes |
| License plate event search | No | No | Yes |

*For the most current list of integrations and add-ons supported by Avigilon Control Center, please visit avigilon.com*

| Add-On Modules and Integrations | Core | Standard | Enterprise |
|---|---|---|---|
| Point of Sale Transaction Engine | No | Yes | Yes |
| Avigilon developed and supported integrations | No | Yes* | Yes |
| 3rd party system integrations | No | Yes | Yes |

*CommScope iPatch, RS2 AccessIt, DDS Aamadeus 5 and DSX only

| Additional Features | Core | Standard | Enterprise |
|---|---|---|---|
| E-Mail event notification (motion & system event) | Yes | Yes | Yes |
| Central station notifications | No | Yes | Yes |
| Digital input email trigger | No | Yes | Yes |
| Manual digital output trigger | No | Yes | Yes |
| Audio recording | No | Yes | Yes |
| Audio output | No | Yes | Yes |
| Rule triggers | No | 3 | Unlimited |
| Self-learning video analytics event configuration | No | Yes | Yes |
| Redundant recording | No | No | Yes |
| Failover connections | No | No | Yes |
| Alarm escalation | No | No | Yes |
| Scheduled and one-time video archive | No | No | Yes |
| License Plate Recognition | No | No | Yes |

## Detailed Product Features

***Integration Options***

- Records and manages video from the full range of Avigilon high definition cameras.
- Monitor video and alarms remotely via a mobile device.
- Provides access to system video from the most popular web browsers.
- Supports the recording and management of a wide range of third-party video and audio sources
- Supports the control of digital input triggers and triggering digital outputs through an I/O board.
- The Avigilon™ Application Programming Interface (API) enables the seamless integration of Avigilon video surveillance with third-party applications.
- The Alarms tab provides the ability to monitor live alarm events received by access systems integrated with the Avigilon software. Users are given the ability to assign, acknowledge and investigate alarm video.
- The Armed Image Panels display live alarms as they are triggered within the video monitoring workspace, and provides the ability to acknowledge and investigate the live video.
- Integration alarms only need to be acknowledged in one system to be marked as acknowledged and processed in both.
- Avigilon develops and maintains integrations to a variety of 3rd party applications. The current list of available integrations is provided here: http://avigilon.com/support-and-downloads/for-software/acc-integration-and-plug-in-downloads/
- Avigilon offers an SDK for 3rd parties to create system integrations with the Avigilon Control Center software. Some of the available integrations are listed here: http://avigilon.com/support-and-downloads/for-software/system-integration-features/
- Receives and translates transaction information from point-of-sale sources in multiple encoding formats.
- Provides the ability to link point-of-sale sources with video for the ability to monitor and review sales transactions.
- Rules can be used to generate events based on point-of-sale transaction exceptions.
- Rules can be used to generate license plate notifications.
- Live license plate recognition is available through an image panel overlay.

***Recording***

- Streams live and recorded video up to 60 frames per second.
- Streams live and recorded video from cameras up to a resolution of 7K (30 MP) — 6720 x 4488.
- Decompresses H.264 video through the client graphics card to optimize the client's total processing power.
- No proprietary recording hardware, hardware multiplexer or time-division technology is required for running the Avigilon system.
- Scalable to support up to 100 servers and/or 10,000 cameras per site.
- All recorded video and audio is digitally signed using 256-bit encryption so video can be authenticated for evidentiary purposes.
- All command and control data is securely transmitted via TCP/IP using cryptographic keys based on SSL to prevent eavesdropping or tampering.
- External system alarms can be can be pre-selected and configured to be monitored and trigger event driven video operations.
- Video and audio recording can be defined by a recording schedule assigned to each video source.
- Recording schedules are based on event types that trigger video recording over a time period each day per week.
- Video recording can also occur manually by user triggered recording.

- Alarms and rules can be triggered by self-learning video analytics based events.
- Each recorded event includes a pre-event and post-event recording option to provide context for a given situation.
- Reference frame recording is an option when no events are detected.
- Motion detection is provided for each individual video source with adjustable sensitivity, threshold and detection zones.
- Primary and secondary video streams from each H.264 video source are recorded and maintained for a set amount of time before the primary stream is discarded as a means of increasing record time.
- The maximum recorded video retention time can be set for each video source.

***Security***

- Each system user can be granted specific live monitoring, investigative, system administration, and device access.
- Child sites can be connected to a parent site to create site families.
- All user, group, and permission settings for a child can be synchronized with and controlled by a parent site.
- A corporate ranking hierarchy can be set up to accurately reflect a company's administrative structure.
- Each system user can only access features that are subordinate to their rank within the system hierarchy.
- Device access can be specific to cameras, encoders, maps, web pages and saved views.
- Windows Active Directory users can be imported and added to Avigilon Control Center Client groups.
- Imported Windows users can use their Windows credentials to access the Avigilon system.
- Permission groups can be copied to different sites and automatically applied to users imported from the same Active Directory.

***System Administration***

- Recorded video can be automatically archived on a schedule.
- Automatic archive can be configured to span a specific time period, cameras, or age of video.
- The system can be set to delete the oldest archived video when the disk is full to make room for new video recordings.
- Archived video can be saved to a local folder, mapped network drive, network storage area, USB or direct attached storage.
- Email notifications are available to tell users and system administrators when an event or system health error occurs. Emails can be set to occur on a schedule, and can include camera snapshots related to an event.
- Notifications can be sent to a central monitoring station whenever a configured event occurs.
- The system maintains an information log which can be used to trigger rules or external notifications.
- When a rule is triggered, the system can be set to execute actions in response.
- Users can be set to receive customized on-screen messages related to a rule event.
- On-screen messages are displayed in one location and the importance of each message is color coded.
- A maintenance log and audit trail of all system errors and events is accessible through the client software and the Admin Tool.
- The health of all servers and cameras within a cluster can be monitored, with the option to export the information in PDF format.
- System wide software updates can be performed from any client with access to the Site.
- System configuration data, including device connection details, can be backed up and restored to new servers in the Site.

***Video and Audio Controls***

- License plate recognition is performed within a specific region of a camera's field of view. Detected license plate data is stored with the video data.
- A Watch List event can be created and used to monitor for the appearance of specific license plates.
- Pan, tilt, zoom (PTZ) controls through the RS-485 interface of a video source can also be used and configured by the Avigilon system.
- The network settings for a video and audio source can be changed through the Avigilon software.
- Each camera's image quality and image rate can be changed without affecting the settings of other cameras.
- The system automatically displays an H.264 camera's secondary stream for live viewing when there is insufficient bandwidth to display the primary stream.
- A camera's exposure, iris, IR filter, backlight compensation, gain, priority, sharpening, saturation, focus, and white balance can be set through the Avigilon system.
- The image dimensions of JPEG2000 camera video can be changed.
- Camera image can be rotated 90°, 180° or 270°.
- Privacy zones can be added to a camera's field of view to block private areas in live and recorded video.
- Manually triggered video recording can be set to stop after a maximum recording duration.
- Audio input, output, gain and volume can be changed.
- Optional full-duplex two-way audio communication.
- Any audio source can be linked to any video source.

***System Display and Control***

- Joysticks to control video display and specific system functions.
- Customizable keyboard commands.
- 1 to 64 video streams can be displayed simultaneously on a single monitor.
- Live and recorded video can also be displayed in non-standard, customizable layouts.
- Save views for reuse.
- The system can be set to bias video display to a lower frame rate or to a lower image resolution if the client network bandwidth or client processing power is insufficient to display the full frame rate and image resolution.
- Information about the camera and scene can be displayed over live or recorded streaming video.
- The Video Analytics Activity overlay displays a color-coded bounding box around moving objects categorized as humans or vehicles.
- The ability to stream video and audio is limited only by the system

hardware capabilities.

- The application window display can be shared with other users for collaborative investigations while viewing both live and recorded video.
- Live and recorded video and audio can be streamed simultaneously on the same monitor.
- Avigilon Virtual Matrix software can be used to provide remote control of multiple monitor displays, including video walls, that can be controlled by remote users with the appropriate rights and permissions.
- Avigilon Virtual Matrix software can display video, maps, and web pages from multiple Sites simultaneously.
- The same live or recorded video stream can be viewed at different zoom levels and areas of interest.
- Switch from live to recorded video on demand for an instant replay of recently recorded video.
- Cycle through a series of opened views (guard tour) based on a specified interval.
- All video sources connected to the system are displayed.
- Drag and drop a video source from a tree of video sources into a window for live or recorded video and audio monitoring.
- Drag and drop a saved view from a tree of views into a window for live or recorded video and audio monitoring.
- Configure how the tree of video sources, maps, web pages and views is displayed.
- Armed image panel is one or more regions in a window for displaying video directly linked to triggered alarms and rules.
- Alarms can be acknowledged directly from an armed image panel.
- Digital outputs can be manually triggered from the video monitoring area.

***Maps***

- Create a map to represent the physical location of cameras and other devices throughout the surveillance system.
- Maps are created from images stored in JPEG, BMP, PNG, or GIF image formats.
- Maps can contain links to other maps and reference a subsection of a camera's field of view.
- Drag and drop a video source from a map into a window for live or recorded video and audio monitoring.
- Cameras on a map are highlighted if the camera is linked to an alarm that has been triggered.
- A map within a map is highlighted if it contains a camera that is linked to an alarm that has been triggered.

***Available Languages***

- Arabic
- Chinese (Traditional)
- Danish
- English
- French
- Hebrew
- Japanese
- Norwegian
- Portuguese (Brazil)
- Russian
- Spanish
- Turkish
- Chinese (Simplified)
- Czech
- Dutch
- Finnish
- German
- Italian
- Korean
- Polish
- Portuguese (Portugal)
- Slovak
- Swedish

# System Requirements

### *Avigilon™ Control Center Client*

System requirements for a machine that will only be used as a remote monitoring client with a single monitor with a resolution of 1280 x 1024. Additional monitors and higher resolutions may require additional processing resources.

| | Minimum | Recommended |
|---|---|---|
| Operating System | Windows Vista, Windows 7 (32-bit or 64-bit), Windows 8 or Windows 8.1 | Windows 7 (64-bit) |
| Processor | Intel Dual Core 2.0 GHz | Quad Core 2.0 GHz |
| System RAM | 2 GB | 2 GB |
| Video Card | PCI Express, DirectX 10.0 compliant with 256 MB RAM | PCI Express, DirectX 10.0 compliant with 256 MB RAM |
| Network Interface | 1 Gbps | 1 Gbps |
| Hard Disk Space | 500 MB | 500 MB |

### *Avigilon™ Control Center Server - Server Configuration*

System requirements for a HD NVR Server with a recording capacity of 32 MB/s (256 Mbps) from up to 128 cameras. The specifications below are intended for an HD NVR Server with only remote viewing.

| | Minimum | Recommended |
|---|---|---|
| Operating System | Windows Vista 64-bit, Windows Server 2008, Windows Server 2012, Windows Server 2012 R2, Windows 7, Windows 8 or Windows 8.1 | Windows Server 2008, or Windows 7. |
| Processor | Intel Quad Core Xeon 2.0 GHz | Intel Quad Core Xeon 2.0 GHz |
| System RAM | 4 GB DDR2 | 4 GB DDR2 |
| Network Interface | 1 Gbps Intel Pro/1000 or Broadcom NetXtreme II server adapters | 1 Gbps Intel Pro/1000 or Broadcom NetXtreme II server adapters |
| Hard Drives | SATA-II 7200 RPM Enterprise Class Hard Drives | SATA-II 7200 RPM Enterprise Class Hard Drives |

### *Avigilon™ Control Center Server - Workstation Configuration*

System requirements for a HD NVR Workstation with a recording capacity of 10 MB/s (80 Mbps) from up to 64 cameras and the ability to view live and recorded image data locally. This system should be able to support up to two monitors with a resolution of 1280 x 1024 each.

| | Minimum | Recommended |
|---|---|---|
| Operating System | Windows Vista 32-bit or 64-bit, Windows Server 2008, Windows Server 2012, Windows Server 2012 R2, Windows 7, Windows 8 or Windows 8.1 | Windows Server 2008, or Windows 7 |
| Processor | Intel Quad Core Xeon 2.0 GHz | Intel Quad Core Xeon 2.0 GHz |
| System RAM | 2 GB DDR2 | 4 GB DDR2 |
| Network Interface | 1 Gbps | 1 Gbps |
| Video Card | nVidia Quadro FX 570 dual DVI | nVidia Quadro FX 570 dual DVI |
| Hard Drives | SATA-II 7200 RPM Hard Drives | SATA-II 7200 RPM Hard Drives |

### *Avigilon™ Control Center Gateway*

Avigilon Control Center Gateway can be installed on the same computer as Avigilon Control Center Server, but for optimal performance results it is recommended that the Gateway be installed separately. The Gateway can handle up to 36 concurrent video streams if installed on a computer with the listed requirements:

| | Minimum | Recommended |
|---|---|---|
| Operating System | Windows Vista 64-bit, Windows Server 2008, Windows Server 2012, Windows Server 2012 R2, Windows 7, Windows 8 or Windows 8.1 | Windows Server 2008, or Windows 7 |
| Processor | Quad Core 2.0 GHz | Quad Core 2.0 GHz |
| System RAM | 4 GB DDR2 | 4 GB DDR2 |
| Hard Disk Space | 500 MB | 500 MB |

### *Avigilon™ Control Center Mobile*

Avigilon Control Center Mobile (ACC Mobile) is currently only available for the listed device platforms. For all other mobile device, use the Avigilon Control Center Web Client.

| | |
|---|---|
| Android version 4.x or 5.x | iPad with iOS 7 or 8<br>iPhone with iOS 7 or 8<br>iPod Touch with iOS 7 or 8 |

### *Avigilon™ Control Center Web Client*

Avigilon Control Center Web Client is installed as part of the Avigilon Control Center Gateway. Listed are the supported browsers for accessing the Web Client.

| | |
|---|---|
| Internet Explorer version 9.0 or later | Firefox version 15 or later |
| Chrome version 20 or later | Safari version 9.0 or later |



© 2015 Avigilon Corporation. All rights reserved. Unless expressly granted in writing, no license is granted with respect to any copyright, industrial design, trademark, patent or other intellectual property rights of Avigilon Corporation or its licensors.

AVIGILON, HDSM, and HIGH DEFINITION STREAM MANAGEMENT (HDSM) are trademarks of Avigilon Corporation. Other product names mentioned herein may be the trademarks of their respective owners. The absence of the symbols ™ and ® in proximity to each trademark in this product or its packaging is not a disclaimer of ownership of the related trademark.

Jun 2015 - Rev 2

# HD Multisensor Dome Cameras



Avigilon offers the broadest range of high definition cameras in the industry – from 1 – 5 MP and 4 – 7K (based on horizontal resolution) – and are available in a variety of formats, including dome, panoramic and fixed. Whether it's a small storefront that requires a few cameras or a large complex system requiring complete coverage of numerous areas, you can trust that you're getting the best solution for your security needs.

The innovative HD Multisensor dome camera is just one way Avigilon can help provide the very best monitoring and protection.

Avigilon's HD Multisensor dome camera offers unsurpassed image quality and flexibility with multi-directional scene coverage. Available in 3 (9 MP) or 4 (12 MP) sensor configurations, each equipped with a remote zoom and focus lens, one HD Multisensor dome can replace a PTZ or multiple fixed cameras, requiring just a single installation with one ethernet cable and one camera license. Avigilon's innovative camera track design allows three or four individual camera gimbals to be individually positioned in flexible configurations to meet challenging field of view requirements. Available in 3 easy to install configurations; in-ceiling, and IP66 and IK10 rated surface mount and outdoor pendant, the HD Multisensor dome camera is ready for all environments.

**KEY FEATURES**

| |
|---|
| 3 x 3 MP (9 MP) or 4 x 3 MP (12 MP) 1/3" Progressive scan sensor |
| Each lens is a 3 MP 2.8-8mm remote zoom and focus lens |
| H.264 and Motion JPEG compression |
| 100dB Wide Dynamic Range performance |
| ONVIF compliant API |
| Automatic exposure control and iris control |
| Automatic removable IR cut filter for IR sensitivity at night |
| Power over Ethernet, 24 VAC or 24 VDC power input |
| External microphone and speaker support for two-way audio |
| External I/O interface for connecting alarms and relays |
| Supports broad environmental conditions for challenging outdoor installations. |

# Specifications



| | | IN-CEILING MOUNT (H3-MH-DC) | SURFACE MOUNT (H3-MH-DO) | PENDANT MOUNT (H3-MH-DP) |
|---|---|---|---|---|
| **IMAGE PERFORMANCE** (per image sensor) | Image Sensor | WDR 1/3” progressive scan CMOS | | |
| | Active Pixels per image sensor | 2048 (H) x 1536 (V) | | |
| | Active Pixels 3 x image sensor | 6144 (H) x 1536 (V) | | |
| | Active Pixels 4 x image sensor | 8192 (H) x 1536 (V) | | |
| | Imaging Area | 4.5 mm (H) x 3.4 mm (V);<br>0.189” (H) x 0.106” (V) | | |
| | Minimum Illumination | 0.23 lux (F1.3) in color mode; 0.023 lux (F1.3) in monochrome mode | | |
| | Dynamic Range | 100 dB | | |
| | Image Rate | 3 image sensor model: 20 fps per image sensor<br>4 image sensor model: 15 fps per image sensor | | |
| | Resolution Scaling | Down to 352 x 240 | | |
| **LENS** (per image sensor) | Lens | 2.8-8mm, F1.3, P-Iris, remote zoom and focus | | |
| | Angle of View | 32.5° - 93° | | |
| **IMAGE CONTROL** | Image Compression Method | H.264 (MPEG-4 Part 10/AVC), Motion JPEG | | |
| | Streaming | Multi-stream H.264 and Motion JPEG | | |
| | Motion Detection | Selectable sensitivity and threshold | | |
| | Electronic Shutter Control | Automatic, Manual (1/6 to 1/8000 sec) | | |
| | Iris Control | Automatic, Manual | | |
| | Day/Night Control | Automatic, Manual | | |
| | Flicker Control | 50 Hz, 60 Hz | | |
| | White Balance | Automatic, Manual | | |
| | Backlight Compensation | Adjustable | | |
| | Privacy Zones | Up to 64 zones | | |
| | Audio Compression Method | G.711 PCM 8 kHz | | |
| | Audio Input/Output | Line level input and output | | |
| | External I/O Terminals | Alarm In, Alarm Out | | |
| **NETWORK** | Network | 100BASE-TX | | |
| | Cabling Type | CAT5 | | |
| | Connector | RJ-45 | | |
| | API | ONVIF compliance version 1.02, 2.00, Profile S (www.onvif.org) | | |
| | Security | Password protection, HTTPS encryption, digest authentication, WS authentication, user access log, 802.1x port based authentication | | |
| | Protocol | IPv4, HTTP, HTTPS, SOAP, DNS, NTP, RTSP, RTCP, RTP, TCP,UDP, IGMP, ICMP, DHCP, Zeroconf, ARP, | | |
| | Streaming Protocols | RTP/UDP, RTP/UDP multicast, RTP/RTSP/TCP, RTP/RTSP/HTTP/TCP, RTP/RTSP/HTTPS/TCP, HTTP | | |
| **MECHANICAL** | Dimensions (ØxH) | 232 mm x 222.44mm; 9.134” x 8.757” | 213 mm x 159.2 mm; 8.4” x 6.3” | 226 mm x 299.77 mm; 8.9” x 11.8” |
| | Weight | 2.18 kg (4.85 lbs) | 3.3 kg (7.3 lbs) | 3.9 kg (8.6 lbs) |
| | Dome Bubble | Acrylic, clear | Polycarbonate, clear | Polycarbonate, clear |
| | Body | Plastic | Aluminum | Aluminum |
| | Housing | Recessed mount | Surface mount | Pendant mount |
| | Finish | Plastic, RAL 9003 | Powder coat, cool gray 2 | Powder coat, cool gray 2 |
| | Tilt | +10° to +67° (depending on position of image sensors) | | |
| | Pan | +/-12° to +/-30° (depending on position of image sensors) | | |
| | Azimuth | +/- 180° | | |
| | Onboard Storage | SD/SDHC/SDXC slot – minimum class 4; class 6 or better recommended | | |
| **ELECTRICAL** | Power Consumption | 13 W with external power or IEEE 802.3af Class 3 PoE | 26 W with external power or IEEE 802.3at Type 2 PoE Plus<br>13 W with IEEE 802.3af Class 3 power | |
| | Power Source | VDC: 24 V +/- 10%, 13 W min<br>VAC: 24 V +/- 10%, 19 VA min<br>PoE: IEEE 802.3af Class 3 | VDC: 24 V +/- 10%, 26 W min.<br>VAC: 24 V +/- 10%, 37 VA min.<br>PoE: IEEE 802.3af Class 3 or IEEE 802.3at Type 2 | VDC: 24 V +/- 10%, 26 W min.<br>VAC: 24 V +/- 10%, 37 VA min.<br>PoE: IEEE 802.3af Class 3 or IEEE 802.3at Type 2 |
| | Power Connector | 2-pin terminal block | 2-pin terminal block | Waterproof 2-pin connector |
| | RTC Backup Battery | 3V Manganese Lithium | 3V Manganese Lithium | 3V Manganese Lithium |
| **ENVIRONMENTAL** | Operating Temperature | -10 °C to +50 °C (14 °F to 122 °F) | -40 °C to +50 °C (-40 °F to 122 °F) with external power or IEEE 802.3at Type 2 PoE Plus<br>-20 °C to +50 °C (-4 °F to 122 °F) with IEEE 802.3af Class 3 power | |
| | Storage Temperature | -10 °C to +70 °C (14 °F to 158 °F) | -10 °C to +70 °C (14 °F to 158 °F) | |
| | Humidity | 0 - 95% non-condensing | 0 - 95% non-condensing | |
| **CERTIFICATIONS** | Certifications | UL cUL CE | ROHS WEEE | RCM EAC |
| | Safety | UL 60950-1 | CSA 60950-1 | IEC/EN 60950-1 |
| | Environmental | | IK10 Impact Rating | Meets IP66 Weather Rating |
| | Electromagnetic Emissions | IC ICES-003 Class B FCC Part 15 Subpart B Class B | EN 55022 Class B | EN 61000-6-3 EN 61000-3-2 EN 61000-3-3 |
| | Electromagnetic Immunity | EN 55024 | EN 61000-6-1 | |

# Outline Dimensions

## In-Ceiling Mount

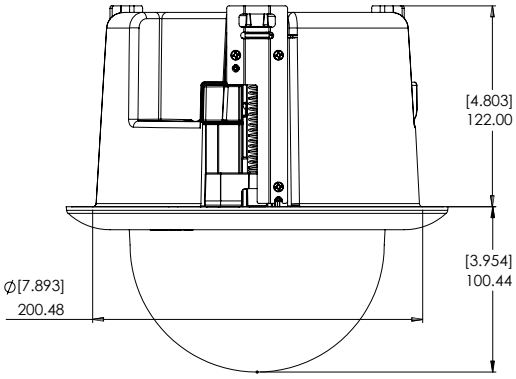


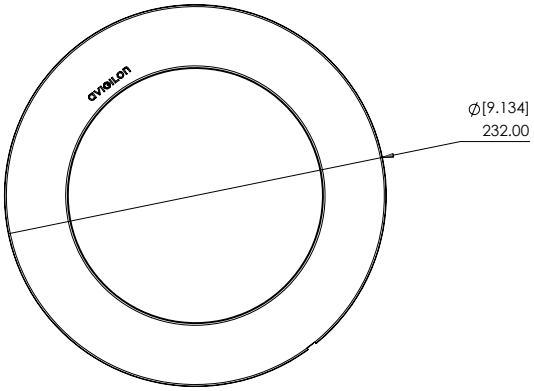


| [X.X] | INCHES |
|---|---|
| X | MM |

## Surface Mount

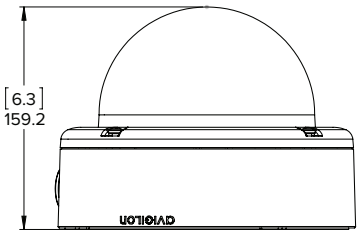


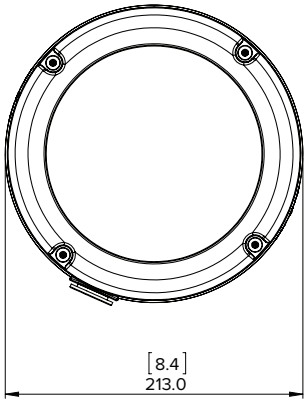


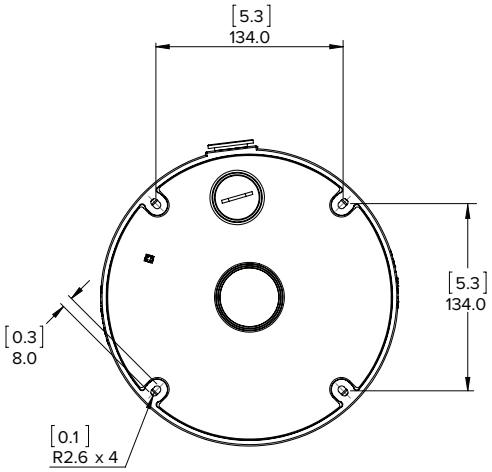


## Pendant Mount

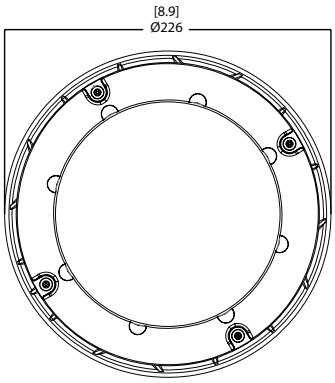


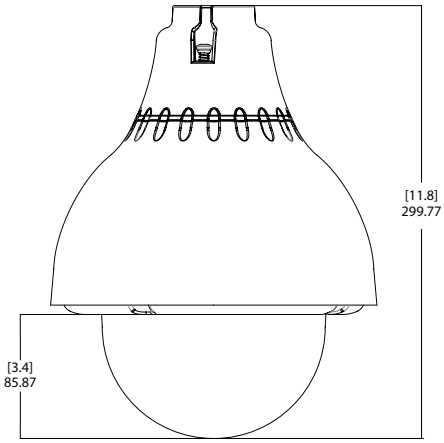


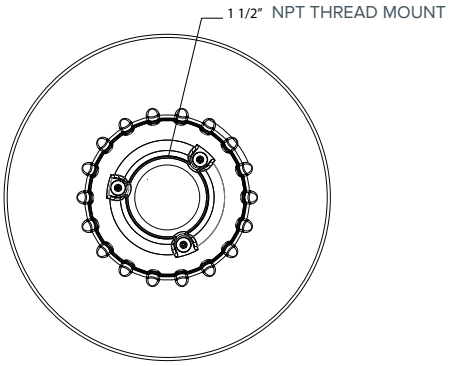

# Ordering Information



**IN-CEILING MOUNT**

| | |
|---|---|
| 9W-H3-3MH-DC1 | 3 x Image Sensor In-Ceiling HD Multisensor Dome Camera |
| 12W-H3-4MH-DC1 | 4 x Image Sensor In-Ceiling HD Multisensor Dome Camera |
| H3PTZ-DC-PNL | Metal Ceiling Panel |
| H3PTZ-DC-CLEAR-B | In-Ceiling Dome Camera Cover with Clear Bubble |
| H3PTZ-DC-SMOKE-B | In-Ceiling Dome Camera Cover with Smoked Bubble |

**SURFACE MOUNT**

| | |
|---|---|
| 9W-H3-3MH-DO1 | 3 Image Sensor Outdoor HD Multisensor Dome Camera |
| 12W-H3-4MH-DO1 | 4 Image Sensor Outdoor HD Multisensor Dome Camera |
| H3PTZ-DP-CLEAR-IK | Dome Camera Cover with Clear Bubble (IK10) |
| H3PTZ-DP-SMOKE-IK | Dome Camera Cover with Smoked Bubble (IK10) |

**PENDANT MOUNT**

| | |
|---|---|
| 9W-H3-3MH-DP1 | 3 Image Sensor Pendant HD Multisensor Dome Camera |
| 12W-H3-4MH-DP1 | 4 Image Sensor Pendant HD Multisensor Dome Camera |
| MNT-PEND-WALL | Indoor/Outdoor Pendant Mount Bracket |
| MNT-AD-POLE-B | Pole Mounting Bracket |
| MNT-AD-CORNER | Corner Mounting Bracket |
| H3PTZ-DP-CLEAR-IK | Dome Camera Cover with Clear Bubble (IK10) |
| H3PTZ-DP-SMOKE-IK | Dome Camera Cover with Smoked Bubble (IK10) |

© 2016 Avigilon Corporation. All rights reserved. AVIGILON and the AVIGILON logo are trademarks of Avigilon Corporation. Other product names mentioned herein may be the trademarks of their respective owners. The absence of the symbols ™ and ® in proximity to each trademark in this document is not a disclaimer of ownership of the related trademark. Unless expressly granted in writing, no license is granted with respect to any copyright, industrial design, trademark, patent or other intellectual property rights of Avigilon Corporation or its licensors.

milestone
The open platform company

# Surveillance management solutions

Easy-to-use video management software and network video recorders for any need

Milestone XProtect® Professional VMS Products

Milestone XProtect® Advanced VMS Products

Milestone Husky™ NVR Series

Surveillance your way.

# Table of contents


The Milestone position ..... 4
The Milestone ecosystem ..... 5
Milestone solution overview ..... 6

**Milestone XProtect® clients** ..... 8

- Milestone XProtect® Smart Client ..... 9
- Milestone XProtect® Web Client ..... 12
- Milestone Mobile ..... 13

**Milestone XProtect® VMS suite** ..... 14

**Milestone XProtect® Professional VMS Products**

- XProtect® Go ..... 15
- XProtect® Essential ..... 16
- XProtect® Express ..... 18
- XProtect® Professional ..... 20
- XProtect® Enterprise ..... 22

**Milestone XProtect® Advanced VMS Products**

- XProtect® Expert ..... 24
- XProtect® Corporate ..... 26

**Milestone Interconnect™** ..... 30

**Mileston Husky™ NVR Series** ..... 32

- Milestone Husky™ M10 ..... 33
- Milestone Husky™ M30 ..... 34
- Milestone Husky™ M50 ..... 35

**Milestone XProtect® add-on products and services** ..... 36

- XProtect® Access Control Module ..... 37
- XProtect® Smart Wall ..... 38
- XProtect® LPR ..... 38
- XProtect® Transact ..... 39
- XProtect® Retail ..... 39
- XProtect® Screen Recorder ..... 40
- Milestone Customer Dashboard ..... 40
- Milestone Care™ ..... 41
- Encoder licensing ..... 41

Milestone product comparison chart ..... 42

Milestone contact ..... 44

Milestone Systems

# The global leader in IP video surveillance

## Award-winning products. Endless surveillance possibilities.

Our open platform foundation has become the core of a thriving ecosystem of partners and a vast distribution network. We innovate and develop products and services for video surveillance management designed to meet any challenge.

We provide easy-to-use products for video surveillance installations of all complexities. With ever-changing surveillance requirements, we prioritize scalability to meet future needs. This means that users can continually add new technologies and devices and easily upgrade their system as needs change.

# The Milestone ecosystem

Our partners play an important role in delivering complete surveillance systems and help us to provide easy-to-use surveillance management solutions and meet customer needs. The Milestone ecosystem comprises a global community of camera providers, encoders, Milestone Solution Partners and hardware providers, integrated with Milestone product solutions.

This enables our sales partners to combine these technologies to create surveillance installations that meet the needs of specific industries or customers, from a single shop owner to large industry solutions such as financial institutions or airports. Together with our ecosystem we provide surveillance solutions that offer more than security by creating ways to optimize processes, reduce costs and proactively manage risk. Open platform technology makes our ecosystem possible.

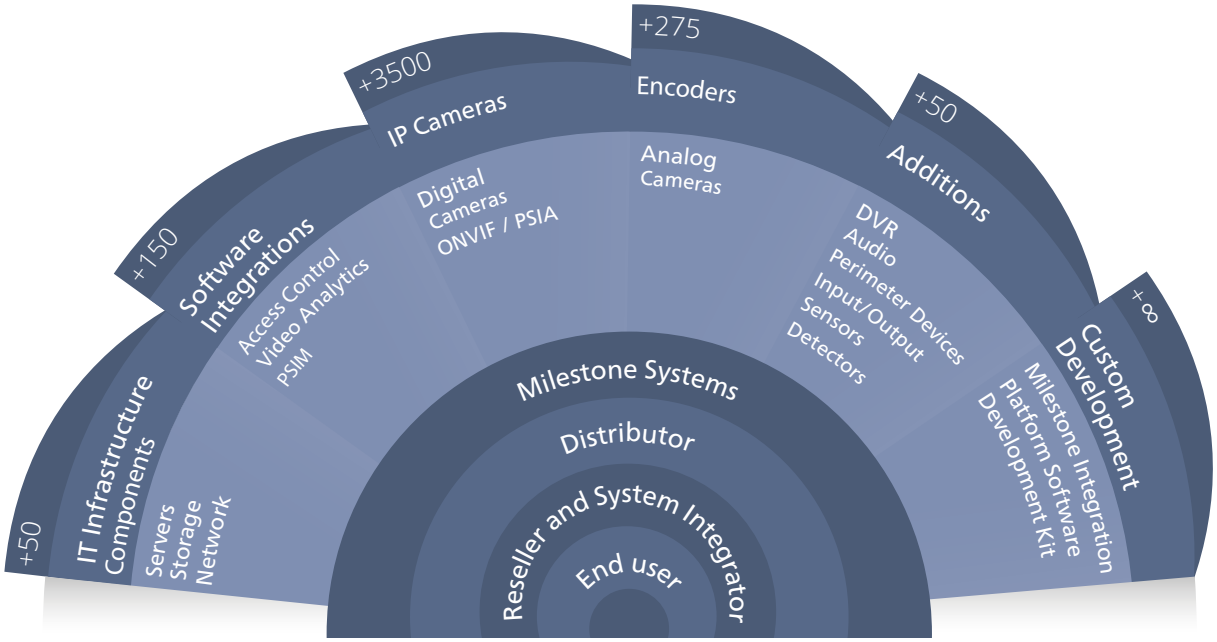


## Milestone open platform

Milestone delivers true open platform technology with published application programming interfaces (API). The Milestone Integration Platform Software Development Kit allows users to integrate third-party applications and systems into Milestone software.

Unique plug-in architecture enables developers to integrate security solutions, such as access control or video analytics, so they become an integral part of the Milestone user interface.

## The future is IP video

IP video surveillance brings the advantages of network cameras and IP networking to the security equation. Surveillance becomes more intelligent as IP video surveillance systems can identify unique behavior, events and actions, which reduces the need for human monitoring.

Milestone software is the hub of the surveillance system bringing all of the components together so users can manage their system through one powerful interface.

## Analog users welcome

While users in many parts of the world continue to rely on analog technology, achieving the most optimal surveillance today will depend on how quickly and easily systems can transition to IP.

The Milestone ecosystem brings together technology, manufacturers and developers to help ease the transition from analog to IP in order to provide clear, efficient and reliable video.

Milestone Systems

# Solution overview

We are proud to offer you a customizable surveillance solution because choosing Milestone means more than just software. Our products can be customized with the latest technologies from our vast network of partners, including cameras, hardware, add-on software and surveillance solutions.

## Third-party devices

- IP cameras
- Pan-tilt-zoom cameras
- Detectors
- IP cameras with Edge Storage
- 360° cameras
- Audio devices
- Analog cameras and encoders
- Card readers
- Metadata sources

## Surveillance solutions

Milestone Interconnect™

### XProtect® Advanced VMS Products

- XProtect® Corporate
- XProtect® Expert

### XProtect® Professional VMS Products

- XProtect® Enterprise
- XProtect® Professional
- XProtect® Express
- XProtect® Essential
- XProtect® Go *

* Not Milestone Interconnect capable

### Milestone Husky™

- **Milestone Husky™ NVR Series** with embedded XProtect VMS

## Cameras and devices

Our products support the industry's widest choice in hardware, more than 3,500 devices from more than 115 manufacturers. You can mix and match cameras to best suit your needs and budget.

## Video surveillance products

Milestone offers the widest range of VMS and NVR products that meet the needs of any installation, from basic surveillance to high-security deployments.

## Why VMS and NVRs for your surveillance?

Video management software and network video recorders expand your surveillance and security system capabilities, providing efficient monitoring, transmission and storage of IP video.

## Why Milestone?

Open platform technology gives you the freedom to choose from the widest range of equipment. Milestone partners with hundreds of companies to offer products that focus on ease of use, scalability and solving any end-user challenge.

### Customization

**Third-party integration**
**Milestone Solution Partners**
Such as video analytics, access control, PSIM and IT Infrastructure components

**Milestone Integration Platform**
- Software Development Kit (MIP SDK)

**XProtect add-on products**
- XProtect Access Control Module
- XProtect Smart Wall
- XProtect LPR
- XProtect Transact
- XProtect Retail
- XProtect Screen Recorder

**Milestone services**
- Milestone Care
- Professional services **
- Custom development **
- Learning & Performance **

** For detailed information visit www.milestonesys.com

### Interfaces

**Video wall**

- XProtect Smart Wall
  XProtect add-on

**XProtect clients**

- XProtect Smart Client

- XProtect Web Client

- Milestone Mobile

### Add additional functionality

Extend your surveillance to suit specific needs and add functionality with XProtect add-ons or by integrating a third-party software solution using the MIP SDK. Milestone services help ensure your Milestone installation is always running smoothly.

### Access your Milestone product

XProtect clients provide three different ways to access and view your surveillance from your computer, from the Internet or on-the-go with mobile devices. The XProtect add-on product XProtect Smart Wall is a video wall product for advanced surveillance needs.

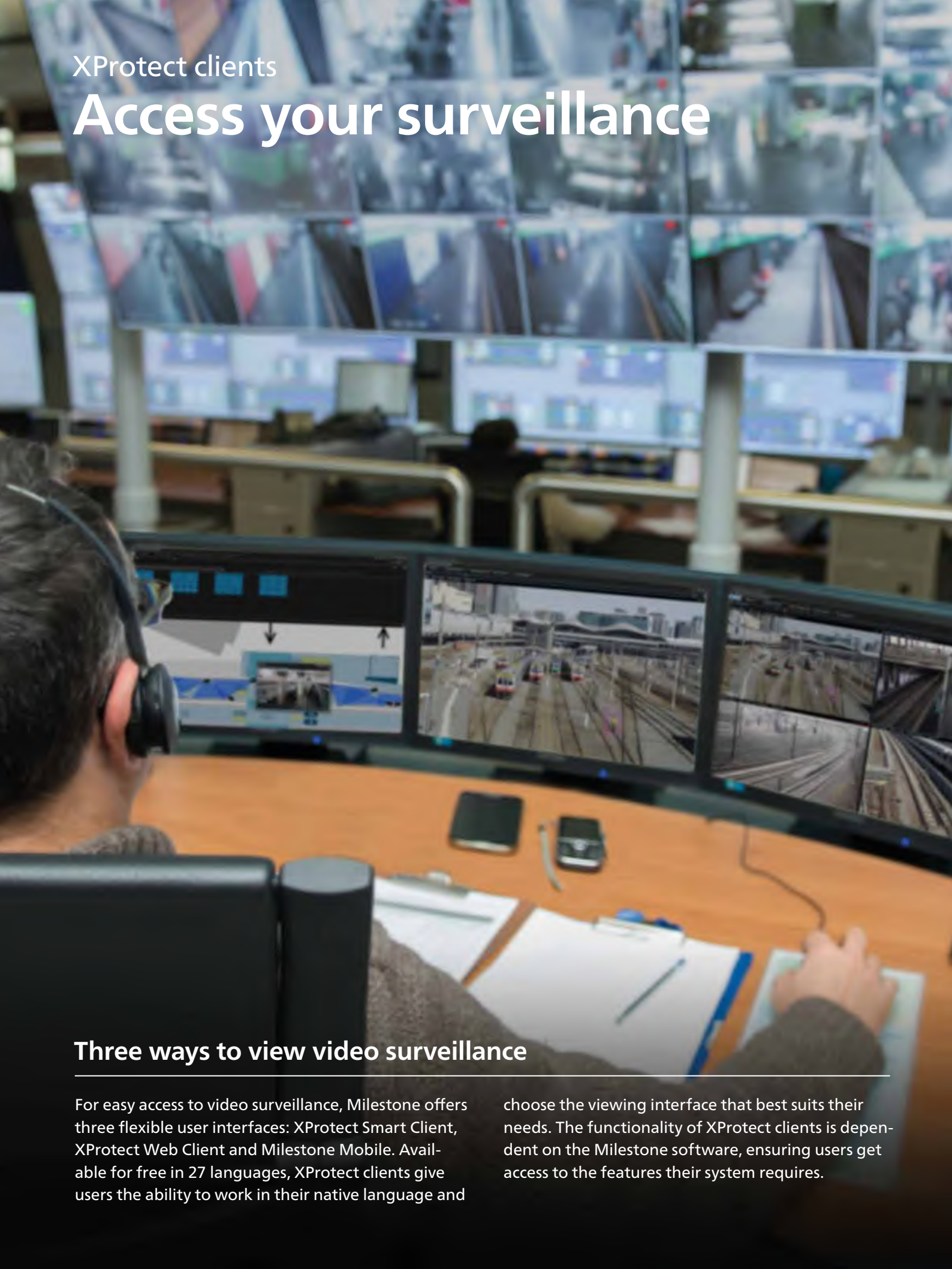

XProtect clients

# Access your surveillance

## Three ways to view video surveillance

For easy access to video surveillance, Milestone offers three flexible user interfaces: XProtect Smart Client, XProtect Web Client and Milestone Mobile. Available for free in 27 languages, XProtect clients give users the ability to work in their native language and choose the viewing interface that best suits their needs. The functionality of XProtect clients is dependent on the Milestone software, ensuring users get access to the features their system requires.

# XProtect Smart Client

## Ultimate control

XProtect Smart Client is an easy-to-use surveillance application designed for daily use. Its streamlined interface provides intuitive functionality to manage any XProtect VMS, Milestone Husky M30 or Milestone Husky M50 installation, regardless of size. XProtect Smart Client provides an efficient working environment that can be optimized for different tasks and operator requirements.

### Quickly identify incidents

The multitude of camera view layouts provides operators with the optimal collection of cameras for each location in order to easily track live events.

### Simple navigation

User-friendly time navigation with playback controls and integrated function for video export video makes it easy to navigate and review recorded video in full time synchronization.

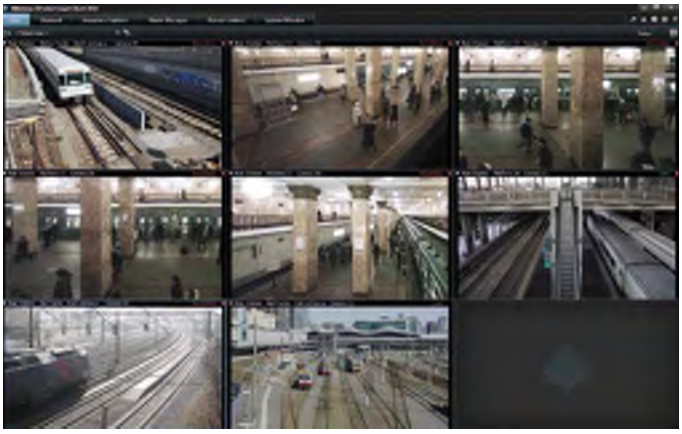

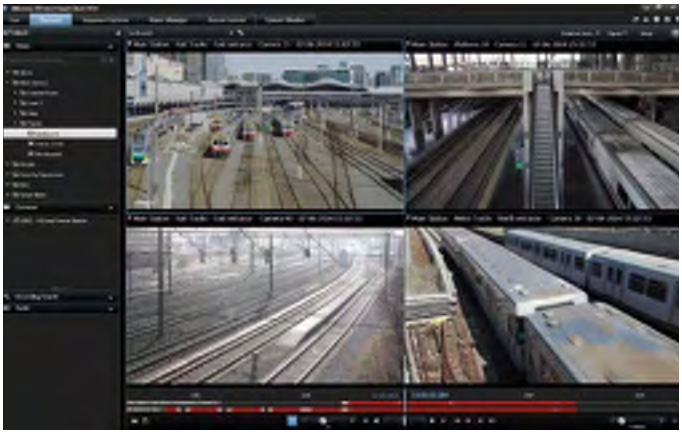

## What's new 2014

### Quickly locate cameras

A camera search function promptly finds cameras and camera views in the system with the ability to create temporary views as a complement to the predefined hierarchical view structure.

### Control integrated systems

Supports XProtect Access Control Module, an add-on product that allows operators to monitor and control integrated access control systems from XProtect Smart Client.

### Assist the operator in assessing a situation

Building on the metadata support in XProtect Advanced VMS Products and camera resided video analytics, XProtect Smart Client 2014 can display bounding boxes around identified objects in live view playback and in exported video.

### Find evidence quickly

Quickly and accurately identify sequences with motion in specific operator-defined areas of a camera view.

### Secure video recordings

Evidence Lock secures the availability of recordings for investigations, which allows users to manually extend the retention time for video recordings by overriding normal video retention policies.

### Logical presentation of evidence

Storyboarding is a vital tool that turns video into evidence by documenting a sequence of events for use in court, internal revision or for other parties granted permission to the video evidence. The ability to piece together video sequences from multiple cameras into a cohesive flow allows for easy object tracking for logical, objective and straightforward revision.

# XProtect Smart Client

## Four processes in your video surveillance workflow

1

### Monitor video

XProtect Smart Client allows users to efficiently investigate incidents while maintaining a visual on live events using the **bookmarking tool**. Operators can flag video sequences of interest and add descriptive notes and the bookmarked sequences can be shared with other operators, improving incident response time.

2

### Respond to alarms

The **Alarm Manager** gives a clear overview of active alarms and their severity. Alarms are assigned different severity levels and the alarm list can list alarms in different orders including most recent alarms or most critical alarms first. Alarms can be configured so that when they are selected, an interactive map automatically displays corresponding alarm and camera locations, providing instant visual verification of incidents.

**Bookmarking tool**

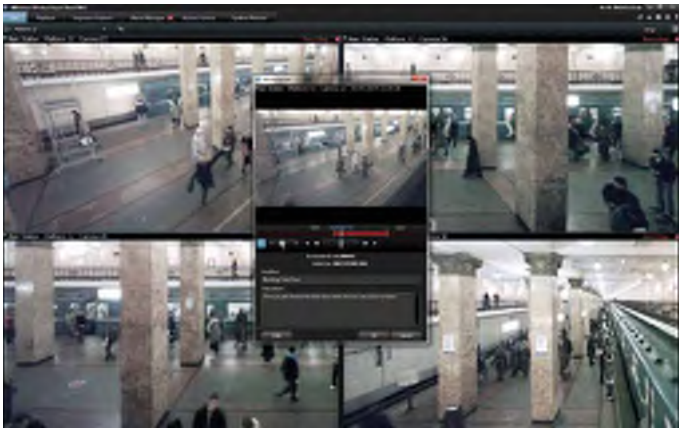

**Alarm Manager**

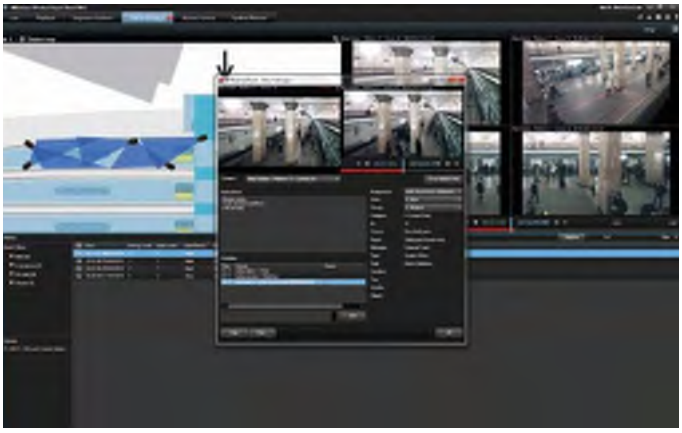

**Independent playback**

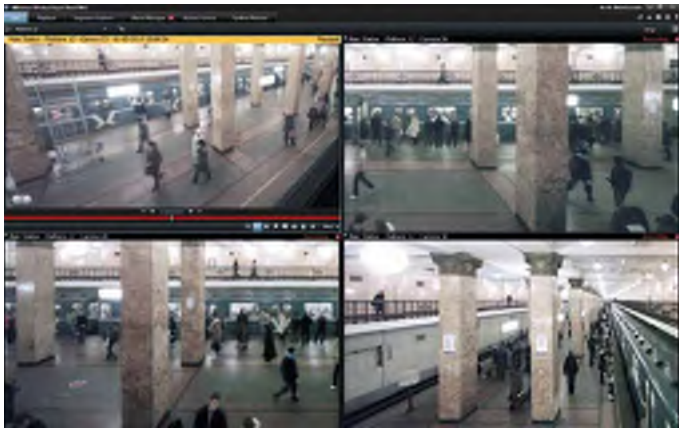

**Interactive map**

Control integrated devices and connected systems with overlay buttons in the camera view, streamlining workflows and improving operator efficiency. Using **independent playback**, you can instantly investigate events from one camera while viewing live video from other cameras.

To ensure immediate incident detection, system alarms can notify users of certain events, or if the equipment is malfunctioning. Alarms from all connected security devices and systems are shown in the **interactive map** where alarms from sub-maps are propagated to the primary map.

3

## Investigate incidents

Searching through extensive recordings can be very time consuming. XProtect Smart Client provides advanced features to investigate incidents as they happen while analyzing recorded video material. Enhanced **Smart Search** uses motion metadata to quickly and accurately identify video with motion in operator-defined areas of a camera view and provides a comprehensible overview of relevant sequences, reducing the search time for relevant video for investigations.

**Smart Search**

**Playback timeline**

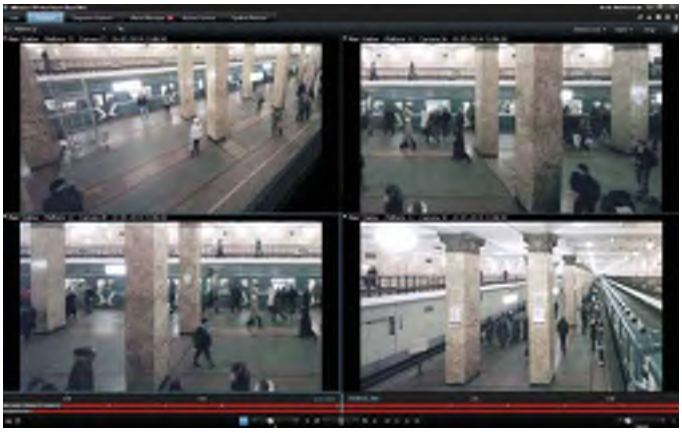

**Playback timeline** enables easy navigation and synchronized playback of all video and audio in a given view. Multi-screen allows operators to work with multiple views and playback video, making it easy for operators to gain a more complete overview.

4

## Manage evidence

In XProtect Smart Client you can turn exported video into evidence using the new **Storyboard function**. Combine exported video from multiple cameras into one cohesive flow, in order to document a sequence of events for use in court, internal revision or others with permission to the video evidence. Or secure evidence by encrypting video and including a digital signature, ensuring the export cannot be read by unauthorized people and that any tampering can be detected.

**Storyboard function**

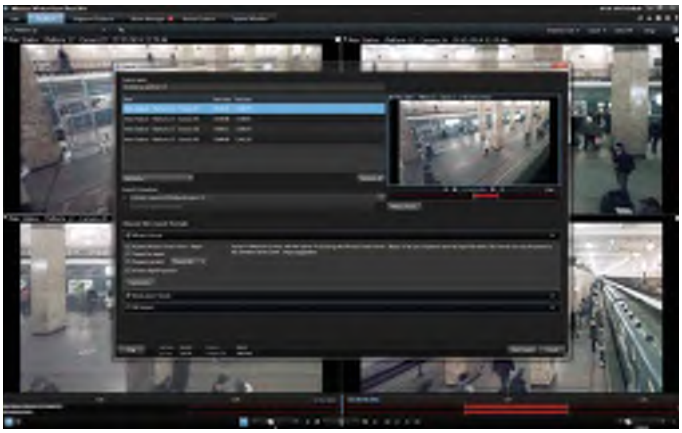

**Evidence Lock function**

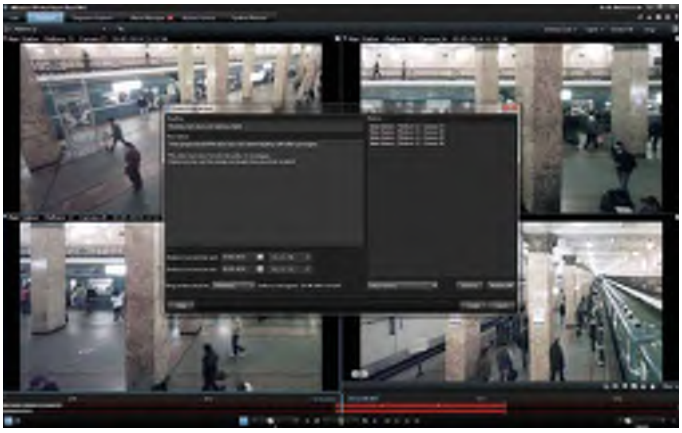

The new **Evidence Lock function** ensures video recordings are available for investigation by allowing users to lock video and extend the retention time. An overview of locked video, direct play back and easy export options make it ideal for installations that investigate a high number of incidents.

# XProtect Web Client

## Access video instantly from any computer

XProtect Web Client is an intuitive web-based interface to view, play back and share video. It provides instant access to all essential functions and is easy to learn and operate for users of all skill levels. XProtect Web Client provides remote access to the surveillance system from all common browsers and computer operating systems. It runs on any Internet-enabled computer or device without installation. It offers system scalability and an optimized user experience in systems with many users.

### Intuitive interface

Easy-to-learn interface that requires no training to use and provides users with an intuitive and efficient interface with all the necessary features to find, view and share video evidence.

### Convenience anywhere

XProtect Web Client makes it easy to access a Milestone surveillance system from any Internet-enabled device. Users can also trigger outputs remotely, such as opening and closing doors, providing greater control over a surveillance installation when off-site.

### Optimized user experience

There is no need to install additional software on the client computer, so users can access video immediately. An optional web browser plug-in enables direct streaming of video as an alternative to server-side transcoding, improving viewing performance while limiting system and network load.

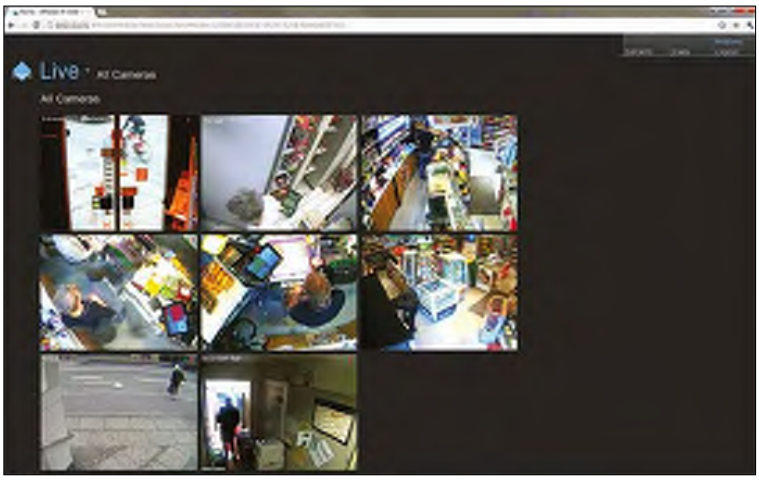


## What's new in 2014

### Quickly locate cameras

Promptly finds cameras and camera views in the system, creating temporary and dynamic views to complement the predefined hierarchical view structure.

### Improved viewing performance

Optional web browser enables direct streaming of video as an alternative to server-side transcoding, improving viewing performance while limiting system and network load.

# Milestone Mobile

## View video anywhere, anytime

Milestone Mobile is a free application for Apple®, Android™ and Windows Phone 8 devices that allows users to view video instantly using smartphones or tablets. Milestone Mobile operates with all XProtect VMS and the Milestone Husky NVR series via Wi-Fi, 3G or 4G connections. Users can view, play back and export video, control outputs and push live video from the device's camera, allowing users to see what's important regardless of their location.

### Flexible access

Milestone Mobile enables instant access to a surveillance installation from anywhere, at any time, via any Internet-enabled mobile device. Users can instantly verify that surveillance areas are safe and secure.

### Extend visibility

With the purchase of an additional per-user license, Milestone Mobile becomes an evidence collector by enabling users to push live video from a mobile device to its connected Milestone surveillance installation. Video Push extends visibility to operators in a central monitoring station who can respond immediately where necessary.

### Secure access

Strict user authorization and fully encrypted communication between Milestone Mobile and the server offers superior security and allows user to safely access their video surveillance system remotely across open public networks.

## What's new in 2014

### Control costs

Optimize network traffic and communication costs by defining a maximum number of frames and resolution for video streams forwarded to Milestone Mobile clients to improve overall viewing performance and scale Milestone XProtect VMS systems with several mobile users.

### Video Push with GPS location data

When used together with XProtect Advanced VMS Products first responders, patrolling guards, and other users have the option to include a GPS position with video when using Video Push, which is beneficial for documenting the location where video is pushed from.

Milestone XProtect VMS suite

# Endless possibilities

## XProtect video management software

XProtect VMS integrates with thousands of cameras, encoders, hardware components and add-on software.

Together with our partner ecosystem, we provide scalable surveillance solutions for any need, regardless of installation size, location or complexity.

**XProtect Professional VMS Products**
For small to mid-size installations

**XProtect Advanced VMS Products**
For large high-security installations

# XProtect Go

## IP video surveillance starts here

XProtect Go is a free version of XProtect video surveillance software designed for small installations. With a wide set of easy-to-use features, XProtect Go enables users to explore XProtect software and discover the true benefits of IP video and the Milestone open platform.

### Connect any camera

Compatible with more than 3,300 cameras and devices, including many USB cameras and built-in computer web cameras.

### Up and running quickly

Set up XProtect Go in just a few clicks and use automatic camera discovery to quickly detect and configure all connected cameras.

### Easy to expand

Upgrade with ease to a more robust or advanced Milestone system as needs change and grow.

### Fast and free download

With just a few clicks you can set up XProtect Go for your small business. Download it today from our web-site www.milestonesys.com.

## What's new in 2014

### Simple upgrade

Significantly improved licensing flow simplifies and reduces time needed to update and upgrade the product.

### Easy deployment

One common installer for all XProtect Professional VMS Products simplifies the deployment process.

### Update notifications

Users are automatically notified about new software versions, ensuring they are always aware of the latest product updates, capabilities and bug fixes.

### Did you know?

XProtect Go is downloaded by more than 150,000 users around the world.

| Product facts | |
|---|---|
| Number of cameras | 8 |
| Maximum number of users | 1 |
| Video retention | 5 days |

### Product highlights

- Supports all XProtect clients
- Support for ONVIF®/PSIA compliant devices
- Built-in motion detection
- One-way audio
- Multiple video export formats

# XProtect Essential

## Basic IP video surveillance

XProtect Essential is affordable open platform video surveillance software for businesses requiring basic, yet effective surveillance. With advanced video search capabilities it is easy to examine and find relevant video evidence, making XProtect Essential ideal for installations that primarily capture video recordings of incidents and reactively conduct investigations. The automatic configuration wizard removes time delays and challenges during initial deployment making it easier than ever to set up.

### Minimize risk

The system is pre-configured to record video when motion is detected, ensuring users have video footage of potential incidents.

### Access anywhere

XProtect Essential is compatible with all three XProtect clients, giving users access to their video surveillance system from anywhere at any time.

### Find and export evidence

The Smart Search feature allows users to search for changes in one or more areas of video from a specific camera to quickly locate video footage. Video evidence is easily exported or shared through a media player, email or MMS.

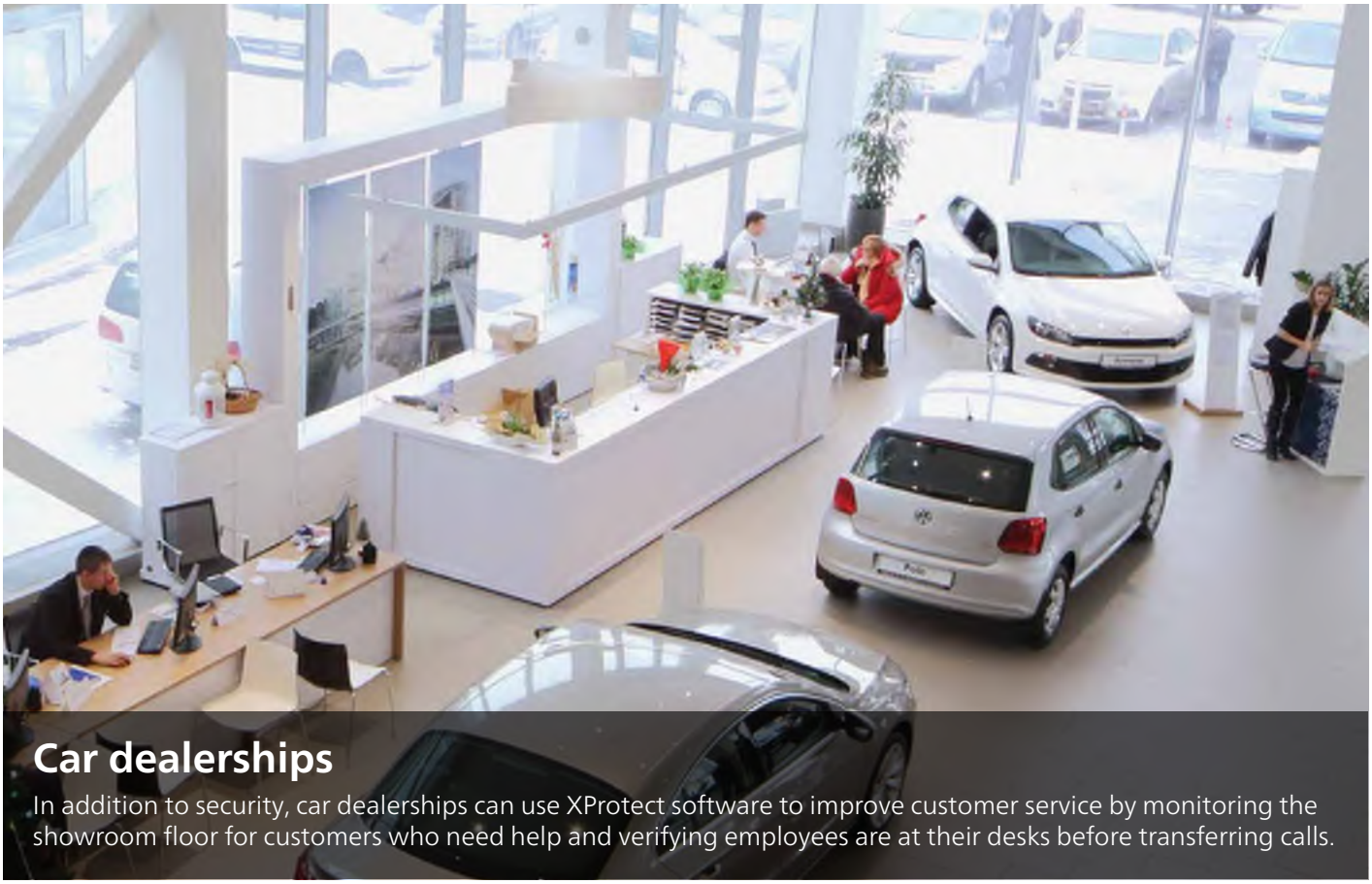

**Car dealerships**

In addition to security, car dealerships can use XProtect software to improve customer service by monitoring the showroom floor for customers who need help and verifying employees are at their desks before transferring calls.

# What's new in 2014

## One-layer interactive map

XProtect Smart Client users get a graphical overview of the entire installation providing visual assistance to identify and navigate through different cameras and views. Users of all skill levels can easily locate and process video recordings using the intuitive map feature.

## Update notifications

Users are automatically notified about new software versions, ensuring they are always aware of the latest product updates, capabilities and bug fixes.

## Simple upgrade

New licensing flow significantly reduces steps and time involved when upgrading to a more advanced Milestone solution and when updating the VMS to the latest version available.

## Automatic motion detection adjustment

Adjusts the sensitivity level to optimize motion detection for background noise levels in the video stream.

## Easy to deploy

All XProtect Professional VMS Products use the same installer, which simplifies the deployment process.

## Did you know?

The Milestone Systems YouTube channel has more than 40 product tutorials, customer testimonials, feature demonstrations and more. Visit www.youtube.com/milestonesys.

| Product facts | |
|---|---|
| Number of cameras | 26 |
| Maximum number of users | 5 |
| Milestone Interconnect | Supported |
| Milestone Customer Dashboard | Supported |

## Product highlights

- Supports all XProtect clients
- One-layer interactive map
- System alarms
- Smart Search video search tool
- Automatic configuration wizards
- Pan-tilt-zoom control
- Built-in motion detection
- Included one-year of Milestone Care Plus

# XProtect Express

## Affordable surveillance with video integration

XProtect Express is affordable video surveillance software for small businesses that need to integrate video into their existing surveillance and security operations. With support for integration capabilities, businesses can create a surveillance solution with custom functionality by adding applications such as video analytics and access control, making XProtect Express ideal for customers that need more than just a surveillance system. The automatic configuration wizard removes time delays and challenges during initial deployment making it easier than ever to set up.

### Increase functionality

Integrate add-on products and third-party solutions, including access control, video analytics and building management systems to create one comprehensive surveillance solution with increased functionality and one common interface.

### Access anywhere

XProtect Express is compatible with all three XProtect clients, giving users access to their video surveillance system from anywhere at any time.

### Situational awareness

With simple and efficient video search tools and multiple export options, users can quickly gather and share evidence when needed.

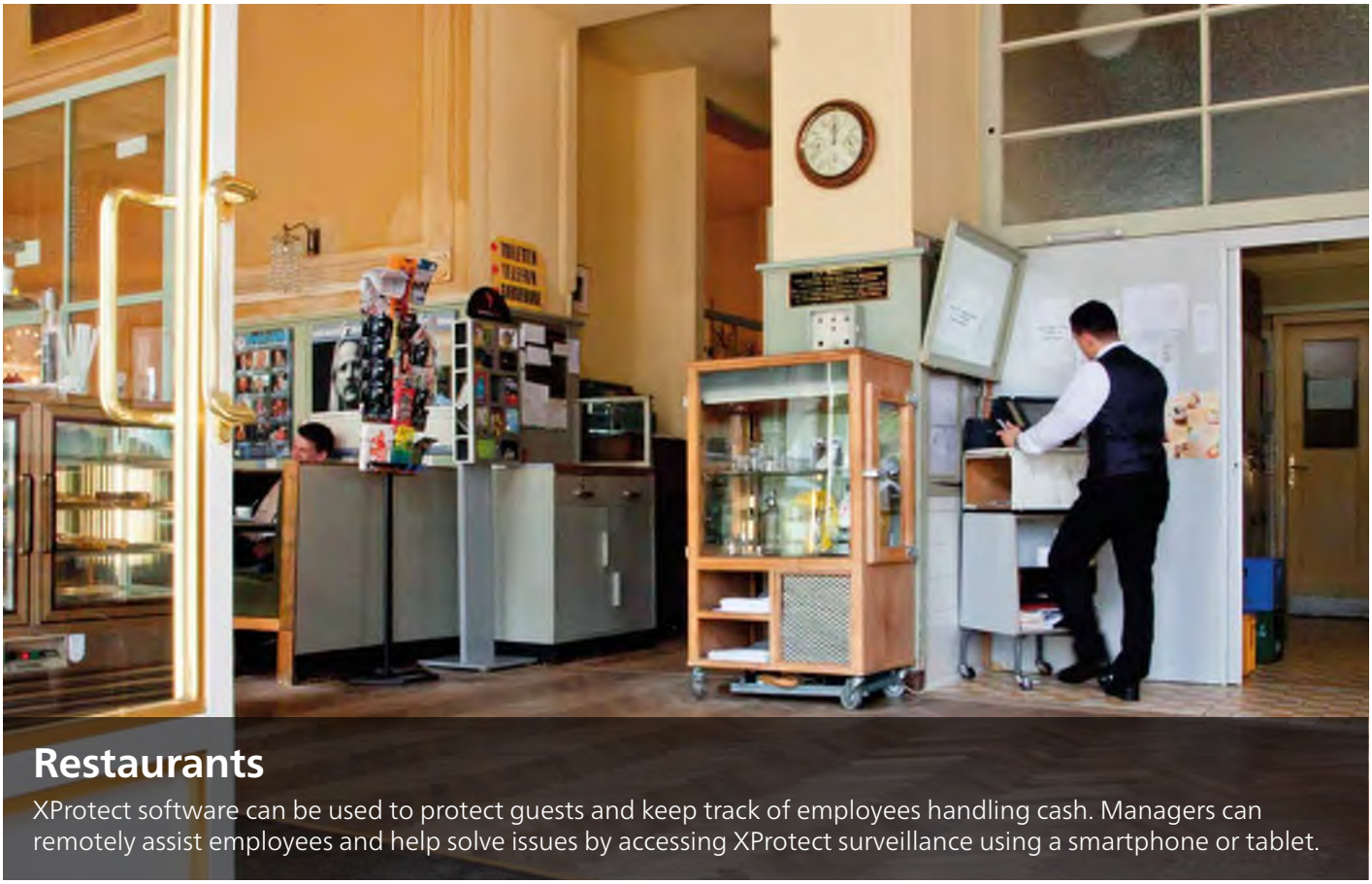

**Restaurants**

XProtect software can be used to protect guests and keep track of employees handling cash. Managers can remotely assist employees and help solve issues by accessing XProtect surveillance using a smartphone or tablet.

# What's new in 2014

## One-layer interactive map

XProtect Smart Client users get a graphical overview of the entire installation providing visual assistance to identify and navigate through different cameras and views. Users of all skill levels can easily locate and process video recordings using the intuitive map feature.

## Update notifications

Users are automatically notified about new software versions, ensuring they are always aware of the latest product updates, capabilities and bug fixes.

## Easy to deploy

All XProtect Professional VMS Products use the same installer, which simplifies the deployment process.

## Simple upgrade

New licensing flow significantly reduces steps and time involved when upgrading to a more advanced Milestone solution and when updating the VMS to the latest version available.

## Support for generic events

Enables easy and fast integration of third-party applications and systems via a simple message-based socket communications interface.

## Automatic motion detection adjustment

Adjusts the sensitivity level to optimize motion detection for background noise levels in the video stream.

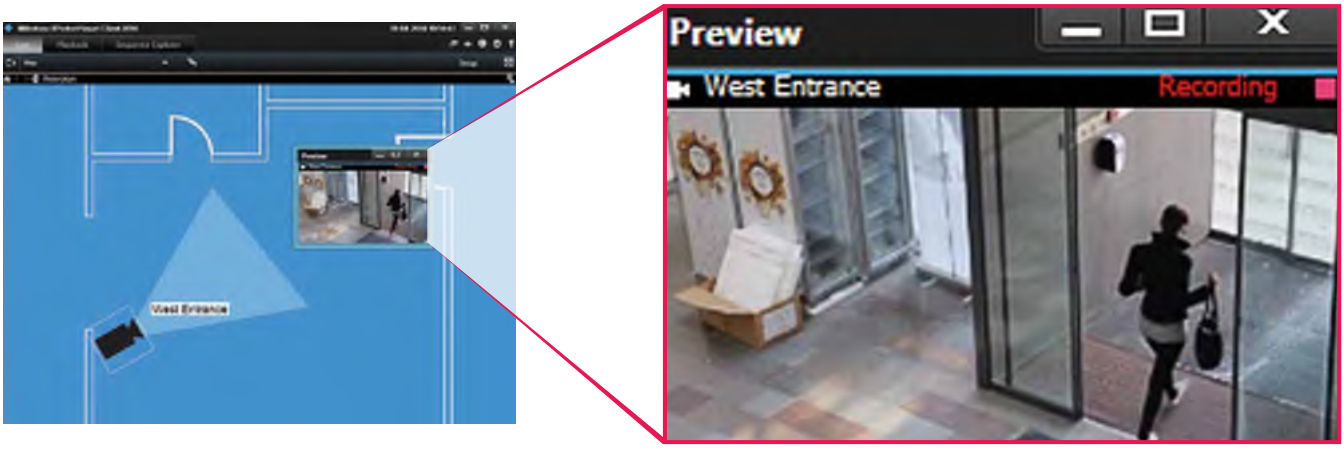


## Did you know?

Some of our many retail customers use XProtect for inventory management by combining electronic label scanning with the software to easily see if products are in the warehouse or on store shelves.

| Product facts | |
|---|---|
| Number of cameras | 48 |
| Maximum number of users | 5 |
| Milestone Interconnect | Supported |
| Milestone Customer Dashboard | Supported |

## Product highlights

- Supports all XProtect clients
- One-layer interactive map
- System alarms
- Privacy masking
- Smart Search video search tool
- Third-party application integration (MIP SDK)
- Pan-tilt-zoom control
- Included one-year of Milestone Care Plus
- Automatic configuration wizards
- Multiple video export formats
- Built-in motion detection
- Support for XProtect Retail

# ◇ XProtect Professional

## Comprehensive surveillance for mid-sized companies

XProtect Professional is comprehensive IP video surveillance for businesses and institutions looking for a complete overview of surveillance. With support for interactive graphical maps showing camera locations, XProtect Professional is ideal for users who need to proactively address incidents. Alarms displayed directly in the maps make it easy to quickly identify and address incidents throughout the system. If an incident occurs, efficient video search tools enable users to easily find relevant video clips and export evidence.

### ◇ Complete visual overview

Users can easily gain a complete overview of campus-style installations with multiple buildings from a single interface displaying multi-layered maps with all camera locations.

### ◇ Instant alerts

The Alarm Manager prioritizes all active alarms making it easy to visually verify whether or not unwanted behaviors occur, even in busy installations with heavy foot traffic.

### ◇ Easily expand

With support for unlimited cameras and servers, XProtect Professional can easily expand as business needs change and grow.

**Universities**

XProtect software ensures security officials can monitor the safety of students, staff and visitors on campus. Integrated access control ensures that only students or staff with valid IDs can enter campus buildings.

# What's new in 2014

## Simple upgrade

New licensing flow significantly reduces steps and time involved when upgrading to a more advanced Milestone solution and when updating the VMS to the latest version available.

## Easy to deploy

All XProtect Professional VMS Products use the same installer, which simplifies the deployment process.

## Update notifications

Users are automatically notified about new software versions, ensuring they are always aware of the latest product updates, capabilities and bug fixes.

## Automatic motion detection adjustment

Adjusts the sensitivity level to optimize motion detection for background noise levels in the video stream.

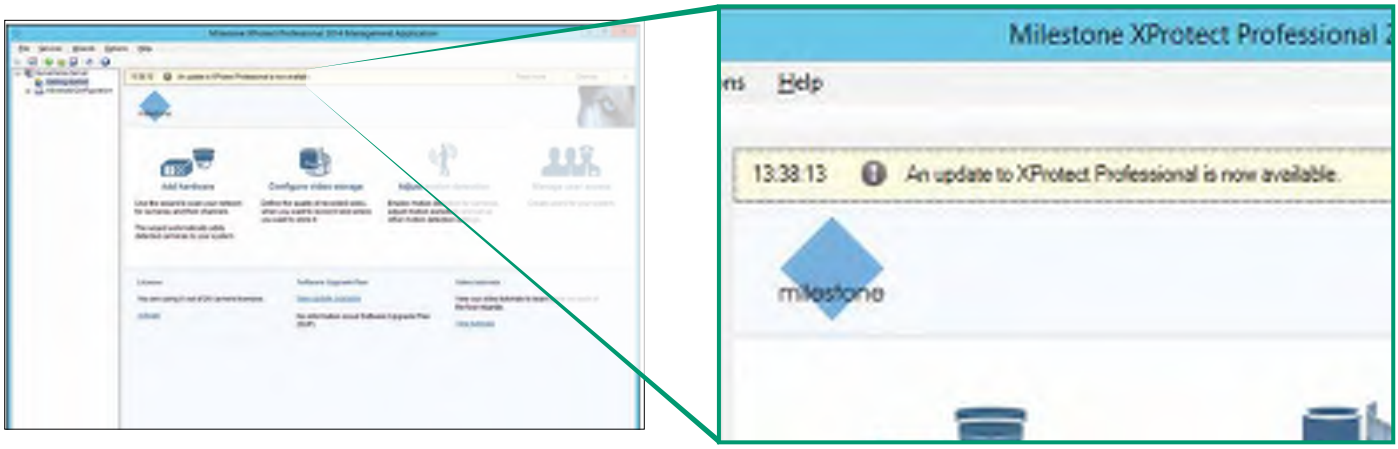


## Did you know?

You can search the Solution Finder for solutions developed by Milestone and third-party vendors that help solve any video surveillance challenge. Find it on the Milestone website: www.milestonesys.com

| Product facts | |
|---|---|
| Numbers of cameras per server | 64 |
| Number of supported servers | Unlimited |
| Maximum number of users | Unlimited |
| Milestone Interconnect | Supported |
| Milestone Customer Dashboard | Supported |

## Product highlights

- Supports all XProtect clients
- Multi-layered interactive maps
- Alarm Manager wizards
- Privacy masking
- Third-party application
- Supports Microsoft Active Directory
- Two-way audio
- Scalable multi-server solution
- Automatic configuration
- Smart Search video search tool
- Multiple video export formats

# ◇ XProtect Enterprise

## Efficient video surveillance for medium and large installations

XProtect Enterprise is video surveillance for medium, multi-site installations. With support for a wide array of sophisticated features XProtect Enterprise is ideal for users who need to quickly respond to incidents and safeguard video evidence. XProtect Enterprise offers a comprehensive overview of the entire surveillance installation, allowing for quick detection of high-risk areas and exceptional situational awareness.

### ◇ Incident detection

Interactive and multi-layered maps provide a comprehensive overview of cameras and layouts allowing for quick detection of trouble areas. Using the Camera Navigator, users can easily track moving objects even in geographically complex security locations.

### ◇ Safeguard video evidence

Unique capabilities ensure the integrity and availability of critical video evidence.

### ◇ Detect motion instantly

Includes a wide range of capabilities which ensure high performance and reliability, including built-in motion detection.

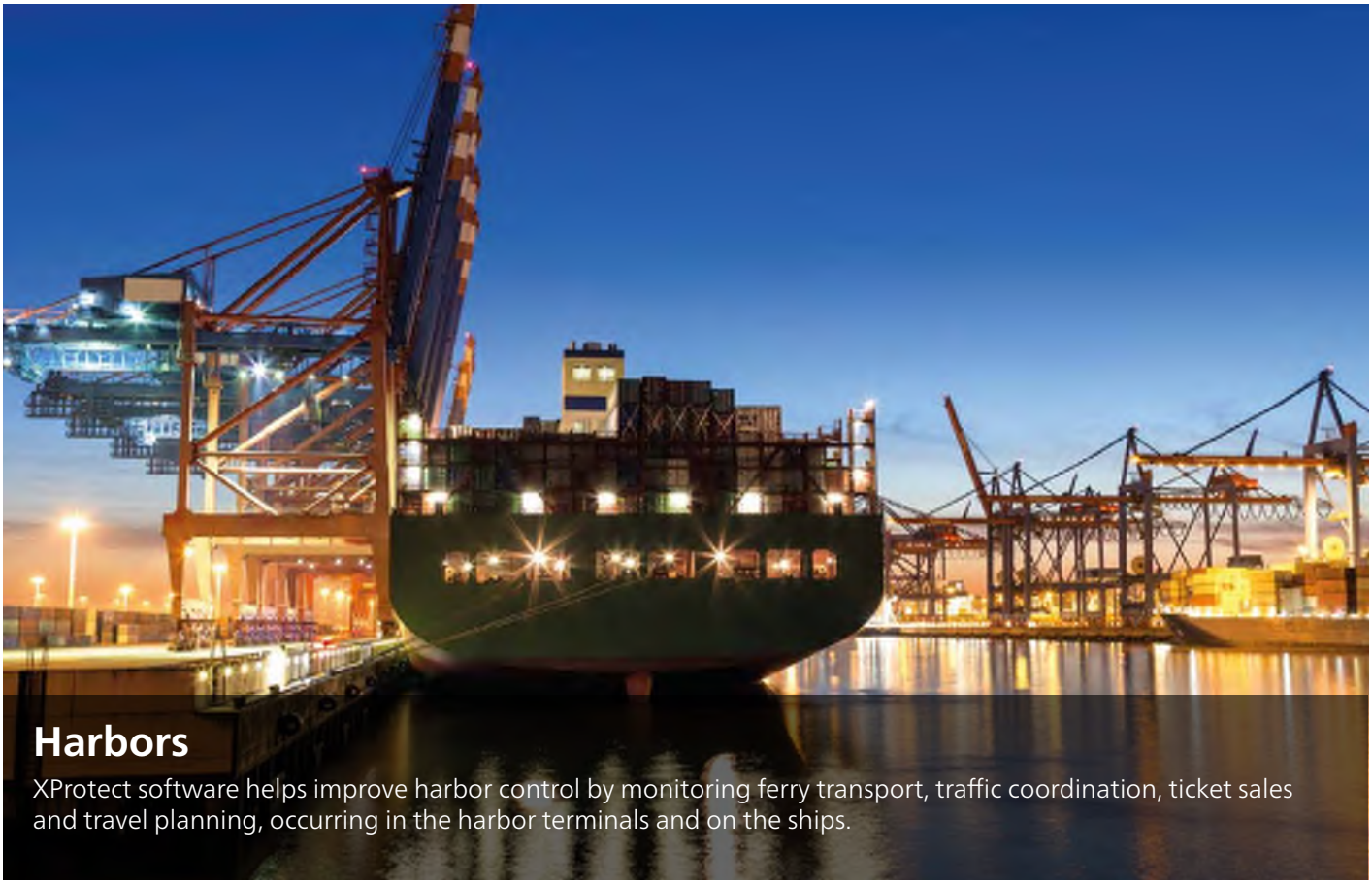

**Harbors**

XProtect software helps improve harbor control by monitoring ferry transport, traffic coordination, ticket sales and travel planning, occurring in the harbor terminals and on the ships.

# What's new in 2014

## Simple upgrade

New licensing flow significantly reduces steps and time involved when upgrading to a more advanced Milestone solution and when updating the VMS to the latest version available.

## Easy to deploy

All XProtect Professional VMS Products use the same installer, which simplifies the deployment process.

## Update notifications

Users are automatically notified about new software versions, ensuring they are always aware of the latest product updates, capabilities and bug fixes.

## Automatic motion detection adjustment

Adjusts the sensitivity level to optimize motion detection for background noise levels in the video stream.

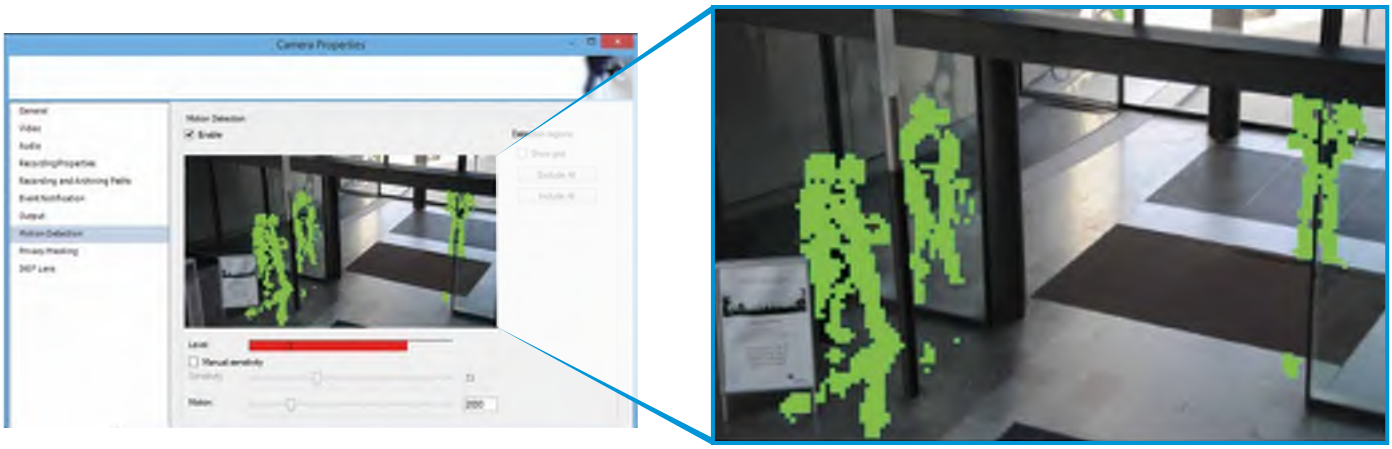


## Did you know?

Milestone Customer Dashboard is an online monitoring service that enables resellers to maintain real-time system status of their customers' installations and keep track of technical incidents in the installation. Resellers can then proactively solve issues before they become a problem to the user. (See page 40)

| Product facts | |
|---|---|
| Numbers of cameras | Unlimited |
| Number of supported servers | Unlimited |
| Maximum number of users | Unlimited |
| Milestone Interconnect | Supported |
| Milestone Customer Dashboard | Supported |

### Product highlights

- Supports all XProtect clients
- Multi-layer interactive maps
- Alarm Manager
- Privacy masking
- Smart Search video search tool
- Third-party application integration (MIP SDK)
- Two-way audio
- Scalable multi-server solution
- Automatic configuration wizards
- Multiple video export formats
- Supports Microsoft Active Directory

# ◇ XProtect Expert

## Advanced video surveillance with central management

XProtect Expert has central management interface features that allows large systems with multiple recording servers to be efficiently managed as one uniform system. Using scheduled and event-driven rules, it is easy to automate security actions and control external systems, reducing the amount of manual tasks. XProtect Expert also has efficient alarm handling and the ability to flag suspicious incidents for later review.

### ◇ Central system management

The management interface includes a wide range of tools that ease the daily administration of large systems that may be deployed across different geographical locations. The device group management concept enables fast and structured management of cameras and other connected devices in large installations.

### ◇ Scalable solution

A highly efficient recording server makes it possible to run more cameras on less hardware and provides unlimited system scalability. This gives system integrators flexibility in the design and scaling of customer systems and allows customers to grow with their system.

### ◇ Situational awareness

Interactive maps combined with the Alarm Manager enable users to quickly visually verify the location and cause of alarms, helping to decrease the number of false alarms. The bookmark function allows users to mark sections of video that are of particular interest and add descriptive notes for later analysis or sharing with other users.

**Sport stadiums**

Video surveillance makes it easier to manage large public places like stadiums. Using XProtect software authorities can patrol the stands and surrounding areas and zoom in on problem areas before dispatching police.

# What's new in 2014

## Support for XProtect Smart Wall

Operators can coordinate response activities using XProtect Smart Wall, an add-on video wall product that displays all video in the installation. It is an ideal solution to gain an overview and share information in any large surveillance installation.

## Bounding boxes

Metadata generated by edge-based video analytics in cameras can be used to identify and highlight objects with bounding boxes in both live and playback.

## Enhanced system security

Dual authorization offers an additional level of system security for customers operating in high-security areas. Users are only granted access to the system once a second user or supervisor has confirmed the log-in with the successful authorization of the second user.

## Automatic motion detection adjustment

Adjusts the sensitivity level to optimize motion detection for background noise levels in the video stream.

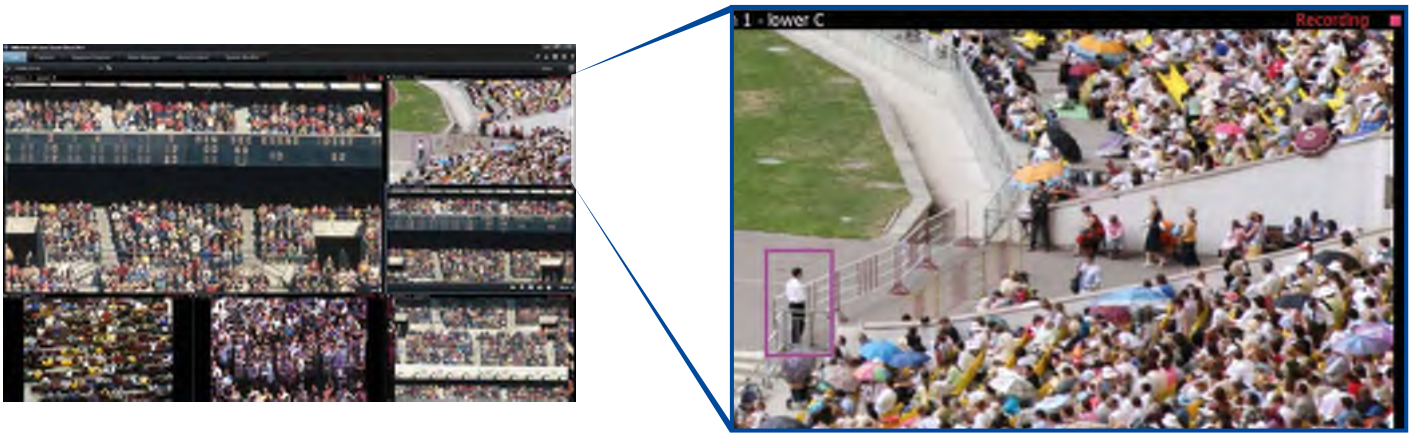


## Did you know?

Milestone offers free XProtect support resources including a Knowledge Base of support articles, a support forum and product manuals and guides. Get support from our website: www.milestonesys.com.

| Product facts | |
|---|---|
| Number of cameras | Unlimited |
| Maximum number of recording servers | Unlimited |
| Milestone Interconnect | Supported |
| Milestone Federated Architecture | Supported |

### Product highlights

- Scalable multi-server solution
- Centralized management
- Rule engine
- Multi-layer interactive maps
- Bookmarking
- Edge Storage
- Metadata support
- User rights management
- Alarm management
- Supports XProtect Smart Wall
- System configuration API
- Customizable management interface

# ◇ XProtect Corporate

## IP video surveillance for high security

XProtect Corporate is IP VMS designed for large-scale, high-security deployments that demand high-performance surveillance. Using the software's single management interface, system administrators can efficiently control all cameras and security devices regardless of the system's size or if it is distributed across multiple sites. For systems demanding supreme situational awareness and precise response to incidents, XProtect Corporate has interactive maps linked to alarms and included support for XProtect Smart Wall.

### ◇ Central management

Advanced group management concepts, inheritance of system settings and automated system management processes make it easy to set up and administrate XProtect Corporate regardless of its size or distribution.

Central management with customizable user interface allows users with different skill levels and responsibilities to administrate any aspect of the system from a single management interface.

### ◇ System redundancy

Failover recording servers maintain video viewing and recording capabilities with minimal interruption and video loss in the event of network problems, server failure, loss of power or any other system problem. Edge Storage is an additional redundancy option to ensure the continuous recording of video. Recordings are retrieved from the camera storage based on time schedules and events reducing the risk of missing evidence.

### ◇ High performance

High-performance recording servers with unique multi-stage video storage, including video grooming, provide efficient long-term storage, while all video remains online.

Native 64-bit operating system support enables flexible sizing and dimensioning of customer installations.

**Airports**

XProtect makes it possible to gain a full overview of large facilities through one system. It is also easy to find and export encrypted evidence that can be shared with authorities to handle prosecutions or to resolve other issues.

### ◇ Quickly identify incidents

Interactive and multi-layered maps provide a comprehensive overview of cameras and layouts of the entire surveillance installation for quick detection of trouble areas.

Alarms are consolidated from all security devices and systems into one video-enabled, single-point Alarm Manager for immediate visual verification. Large, critical surveillance installations, such as alarm centers, gain rapid response time with the included XProtect Smart Wall.

### ◇ Mark and store video

Users can quickly sort through large amounts of video evidence by using advanced search tools such as Sequence Explorer and Smart Search.

The bookmark function allows users to mark video sections of particular interest and add descriptive notes to be analyzed or shared with other users.

### ◇ Ensure video credibility

Encryption of stored and exported video protects the integrity of video data while digital signing technology ensures the validity of the entirety of the evidence content when played back by law enforcement and public authorities.

High-security installations can protect the integrity of live and recorded video with strict user rights, such as restricting permission to: specific cameras, functions, individual user access or specific time periods.

## Distributed operation

**Milestone Federated Architecture™** is a system concept that enables users to connect multiple, individual XProtect Corporate and XProtect Expert sites so they can be operated as one large system with a central XProtect Corporate system. This provides operators with access to all cameras in the system, while all federated sites can be administered centrally.

**Milestone Interconnect** is a complimentary system concept that enables all Milestone video surveillance solutions to be centrally operated from a central XProtect Corporate system (see details on page 31).

## Did you know?

Kruger National Park in South Africa is using XProtect software to protect wildlife from poachers and being hit by speeding cars. Park managers monitor vehicles entering and leaving park gates and track vehicles from poachers.

| Product facts | |
|---|---|
| Number of cameras | Unlimited |
| Maximum number of servers | Unlimited |
| Milestone Interconnect | Management and supported |
| Milestone Federated Architecture | Management and supported |

### Product highlights

- Scalable multi-server solution
- Centralized management
- High system availability
- Multi-stage video storage
- Encrypted video storage
- Evidence lock
- Situational awareness tools
- Metadata support
- Edge Storage
- Tiered management rights
- Customizable interface
- XProtect Smart Wall included
- System configuration API

# What's new in 2014

## Video metadata

An ONVIF-compliant metadata framework enables transparent handling and storage of metadata from cameras and other sources. Support in MIP SDK makes external system access to metadata and native presentation in XProtect Smart Client possible.

## Bounding boxes

Metadata generated by edge-based video analytics in cameras can be used to identify and highlight objects with bounding boxes in both live and playback.

## XProtect Smart Wall included

XProtect Corporate 2014 includes XProtect Smart Wall, allowing customers to use Milestone's advanced video wall solution without additional licensing cost.

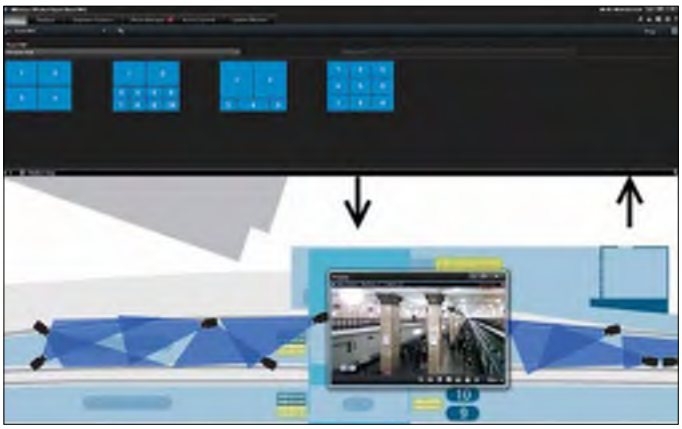

## Enhanced system security

Dual authorization offers an additional level of system security for customers operating in high-security areas, where users only are granted access to the system once a second user, or supervisor, has confirmed the log-in.

## Secure video recordings

Evidence Lock is a function that secures the availability of video recordings for investigations and allows XProtect Smart Client users to extend the retention time for video evidence by overriding defined video retention policies.

## External system control

Allow external systems to make changes to the system's configuration. This unlocks a range of new possibilities because it is possible to control system settings from external business systems and applications.

## Tiered management rights

It is possible to assign partial management permissions to system administrators, which is vital for any large installation with several administrators, each with their own dedicated areas of responsibility.

## Customizable management interface

The Management Client can be customized for different categories of system administrators, optimizing the interface for different roles and responsibilities.

## Automatic motion detection adjustment

Adjusts the sensitivity level to optimize motion detection for background noise levels in the video stream.

# XProtect Corporate

## Customer story - Paul Smith

XProtect Corporate made it possible to gradually transition all of UK-based retailer Paul Smith's surveillance systems from analog to IP technology.

**Retail shops**

XProtect makes it possible to gain a full overview of large facilities through one system. It is also easy to find and export encrypted evidence that can be shared with authorities to handle prosecutions or to resolve issues.

### Global migration to long term IP video solution

XProtect Corporate is being used in all of UK-based retailer Paul Smith's 45 stores around the world. The system is mainly used for loss prevention, but will also provide vital business intelligence to retail operations management.

"The fact that Milestone XProtect is built on open platform architecture using Microsoft Active Directory makes rapid roll out possible, as well as cost-effective maintenance and support. Selecting Milestone XProtect enables us to migrate the whole CCTV estate onto a single platform to establish uniformity and consistency." said Paul Smith's head of IT, Lee Bingham.

XProtect Corporate makes it possible for Paul Smith to control which managers can see cameras from different stores around the world. This helps reduce costs because managers do not necessarily need to physically visit a store to solve issues. Lee Bingham explains:

"We can now log in via the Milestone XProtect Smart Client front-end and retrieve live and recorded video from all the cameras anywhere in the world. If there is a problem, we can generally fix it via the network from Nottingham, England without getting on a plane. This saves management time and reduces our company's carbon footprint."

Milestone Interconnect™

# Unite your surveillance

## Cost-efficient distributed surveillance

Link distributed Milestone solutions with the advanced surveillance functions of XProtect Corporate to create a cost-efficient and scalable solution. Each interconnected system is independent while video can be accessed and managed centrally.

# Milestone Interconnect

## Connect and centrally manage remote sites

Milestone Interconnect is a unique system concept that allows all XProtect VMS and Milestone Husky NVR products to be interconnected with Milestone premium XProtect Corporate software. Milestone Interconnect provides a cost-efficient and flexible way to gain central surveillance operations across geographically dispersed sites.

Milestone Interconnect allows you to roll out broader branch and site deployments, where the most optimal Milestone surveillance product is selected for individual remote locations, while the central operation is made from a self-determined headquarters, offering full functionality to any interconnected camera. Milestone Interconnect also allows customers to grow with their existing Milestone solutions where a central operational overlay can be added across already existing local installations.

### Centralized management

Faster incident handling is possible because operators in the central system can access video and receive alarms from connected remote sites. Users can also centralize daily operations, including monitoring video and handling evidence, for effective management of multiple stand-alone video surveillance installations.

### Cost effective

Reduce the need for local security personnel, maintenance operations and other staff because systems can be managed remotely, reducing on-site visits. Users can also optimize storage using available remote or central storage and network resources.

### Intermittent connections

Milestone Interconnect is resilient against intermitted connections between the central XProtect Corporate system and any interconnected system. It is a perfect solution for systems with temporary and unstable connections. Using a combination of local and central video storage, video can be retrieved from interconnected sites based on time schedules or manual requests.

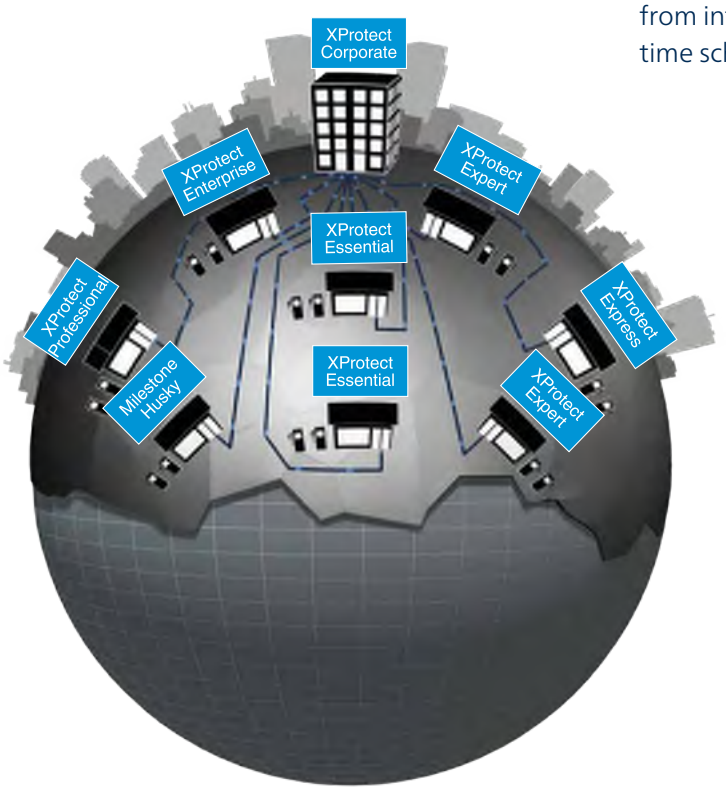

Milestone Husky™ NVR Series

# Video surveillance your way

## Integrated solutions with unlimited options

The innovative Milestone Husky Series of network video recorders (NVRs) delivers fully integrated, customizable video surveillance solutions. This state-of-the-art series of NVRs can be tailored to meet the demands of any surveillance installation, from a small family-owned business to a complex surveillance installation with multiple sites and hundreds of cameras.

# Milestone Husky M10

## Plug-and-play, walk away

### It's that easy

Our small and sleek NVR is preinstalled with Milestone video management software for efficient performance and reliability. Ideal for entry-level video surveillance, it can be set up in minutes to instantly access live and recorded video from any Internet-enabled device. No training required.

### Easy to set up and operate

Plug in Milestone Husky M10 and within minutes, you're up and running. Features include automatic camera discovery, configuration wizards and an intuitive interface.

### Helping you do more

Benefit from features such as built-in motion detection and user management capability, which enable you to control the administration of multiple system operators.

### Viewing clients

Access your system remotely via XProtect Web Client or get on-the-go surveillance with Milestone Mobile.

### Entry-level surveillance functionality

Stream live video from all cameras in one viewing interface and enjoy simple view and playback. The NVR allows for easy export of forensic evidence and investigation and includes PTZ controls.

### Scalability with Milestone Interconnect

Easily connect multiple Milestone Husky NVRs for unlimited scalability and cost effectiveness. Plus, you can create simpler solutions at remote sites, while taking advantage of XProtect Corporate premium features from a primary central location.

| Product specifications | |
|---|---|
| Camera channels | 4/8 |
| Dimension | 200(W)x200(D)x45(H) mm |
| CPU | ATOM |
| Memory on board | 4GB |
| Storage | 1TB – 2TB |
| Operating system support | Linux |
| Power Input | 60W / 100-240V |
| Maximum number of users | 6 |
| Dual network interface cards | Yes |
| Rear System I/O2 | 2 x GbE, RJ45 , 4 x USB<br>1 x DVI / 1x HDMI |
| Environment operation temperature | 0~40°C |
| Codecs supported | H.264, MPEG-4, M-JPEG |
| Certificates | CE, FCC, UL |
| Storage Temp: | -20°C ~70°C |

| Product highlights | |
|---|---|
| One-way audio support | Yes |
| Supports ONVIF cameras | Yes |
| Pan-tilt-zoom (PTZ) support | Yes |
| Milestone Customer Dashboard | Yes |
| XProtect Web Client | Yes |
| Milestone Interconnect | Yes |
| Included three years of Milestone Care Plus | Yes |
| Included hardware warranty | Yes |

# Milestone Husky M30

Ready to take off

## Geared up for emerging needs

Designed for workstation installations with comprehensive surveillance needs, the Milestone Husky M30 NVR is preinstalled with XProtect video management software and compatible with third-party integrations. Customize to fit your budget and scale up as your business grows.

## Comprehensive interactive monitoring

Benefit from interactive and multi-layered maps, integrated Alarm Manager, advanced video search tools and multi-channel two-way audio for message broadcasts or direct communications.

## Easy to deploy and expand

Install simply and quickly with configuration wizards and automatic camera discovery. You can also connect multiple Milestone Husky NVRs for increased efficiency and cost effectiveness.

## Helping you do more

Access video remotely for faster response to incidents. Features includes built-in motion detection and dual/ independent, configurable video streams to help optimize servers and network infrastructure.

## Support and warranty

The Milestone Husky series includes three-years of Milestone Care Plus and a three-year hardware warranty. Milestone Care Plus includes the Milestone Customer Dashboard, an online system monitoring service that enables resellers to keep track of real-time technical incidents in the system and proactively solve issues.

| Product specifications | |
|---|---|
| Camera channels[1] | 10 / 20 |
| Dimension | 30(W)x30(D)x9(H) cm |
| CPU | i5 or i7 |
| Memory on board | 4GB – 16GB |
| Storage | 2TB – 12TB |
| Operating system and VMS | WES7, XProtect |
| Solid state drive | 32 GB for VMS and OS |
| Maximum power consumption | 68.8W, 24V DC input |
| Power Input | 200W / 100~240V |
| Environment operation temperature | 0~40°C |
| Number of supported servers | Unlimited |
| Maximum number of users | Unlimited |
| Dual network interface cards | Yes |
| Certificates | CE, FCC, UL |
| Storage Temp: | -20°C ~70°C |

| Product highlights | |
|---|---|
| Supports all XProtect clients | Yes |
| One-way and two-way audio support | Yes |
| Multiple video export formats | Yes |
| Video Push | Yes |
| Smart Search | Yes |
| Alarm Manager | Yes |
| Milestone Interconnect | Yes |
| XProtect add-ons and third-party applications | Yes |
| Milestone Customer Dashboard | Yes |

*1 Base configuration, camera add-ons available.*

# Milestone Husky M50

Feature-rich with unlimited capabilities

## The sky's the limit

Introducing Milestone Husky M50 – our premier, rack-mounted solution combining high-performance, industrial-grade hardware with preinstalled XProtect video management software. Feature-rich with unlimited options, the model is perfect for advanced installations with sophisticated surveillance needs.

## Advanced interactive monitoring and graphical overview

Get a graphical overview of your surveillance installation with interactive and multi-layered maps. Alarm Manager map integration offers a consolidated overview of system alarms. Also includes advanced video search tools and multi-channel, two-way audio.

## Simple to set up and scale up

Follow the configuration wizard and set up with just a few clicks. You can add devices with automatic camera discovery while unlimited servers maintain system performance. Scale up by connecting multiple Milestone Husky NVRs.

## Greater efficiency and management

Remote access, built-in motion detection, and dual/independent, configurable video streams - features that add convenience and help optimize servers and network infrastructure.

## Support and warranty

The Milestone Husky series includes a three years of Milestone Care Plus and a three-year hardware warranty. Milestone Care Plus includes the Milestone Customer Dashboard, an online system monitoring service that enables resellers to keep track of real-time technical incidents in the system and proactively solve issues. Lastly, the Milestone Husky M50 exclusively offers optional RAID storage.

| Product specifications | |
|---|---|
| Camera channels[1] | 10 / 20 / 40 / 80 |
| Dimension | (W)x40(D)x8.8(H) cm |
| CPU | i7 |
| Memory on board | 8GB – 48GB |
| Storage | 4TB – 24TB |
| Operating system and VMS | WES7, XProtect |
| Solid state drive | 32 GB for VMS and OS |
| Hot plug disk drives | Yes |
| Dual network interface cards | Yes |
| Environment operation temperature | 0~40°C |
| Number of supported servers | Unlimited |
| Maximum number of users | Unlimited |
| Certificates | CE, FCC, UL |
| Storage Temp: | -20°C ~70°C |

| Product highlights | |
|---|---|
| Supports all XProtect clients | Yes |
| One-way and two-way audio support | Yes |
| Multiple video export formats | Yes |
| Video Push | Yes |
| Smart Search | Yes |
| Alarm Manager | Yes |
| Milestone Interconnect | Yes |
| XProtect add-ons and third-party applications | Yes |
| Milestone Customer Dashboard | Yes |

*1 Base configuration, camera add-ons available.*

XProtect® add-ons products and services

# Expanding opportunities

## Add specialized functionality

XProtect add-on products are separate software components installed on top of the existing Milestone video surveillance system, providing users with extra value and functionality. Milestone services help monitor, maintain and scale the installation.

# ◇ XProtect Access Control Module

## Monitor and control access points

XProtect Access Control Module unites access control and video into one solution. Extending the capabilities of the Milestone Integration Platform, XProtect Access Control Module enables easy integration of third-party access control solutions into XProtect Smart Client. Users have a consolidated interface to operate access control systems. Dedicated functions in XProtect Smart Client enable users to effectively monitor access events, manually control passage and conduct investigations on specific access points or cardholders.

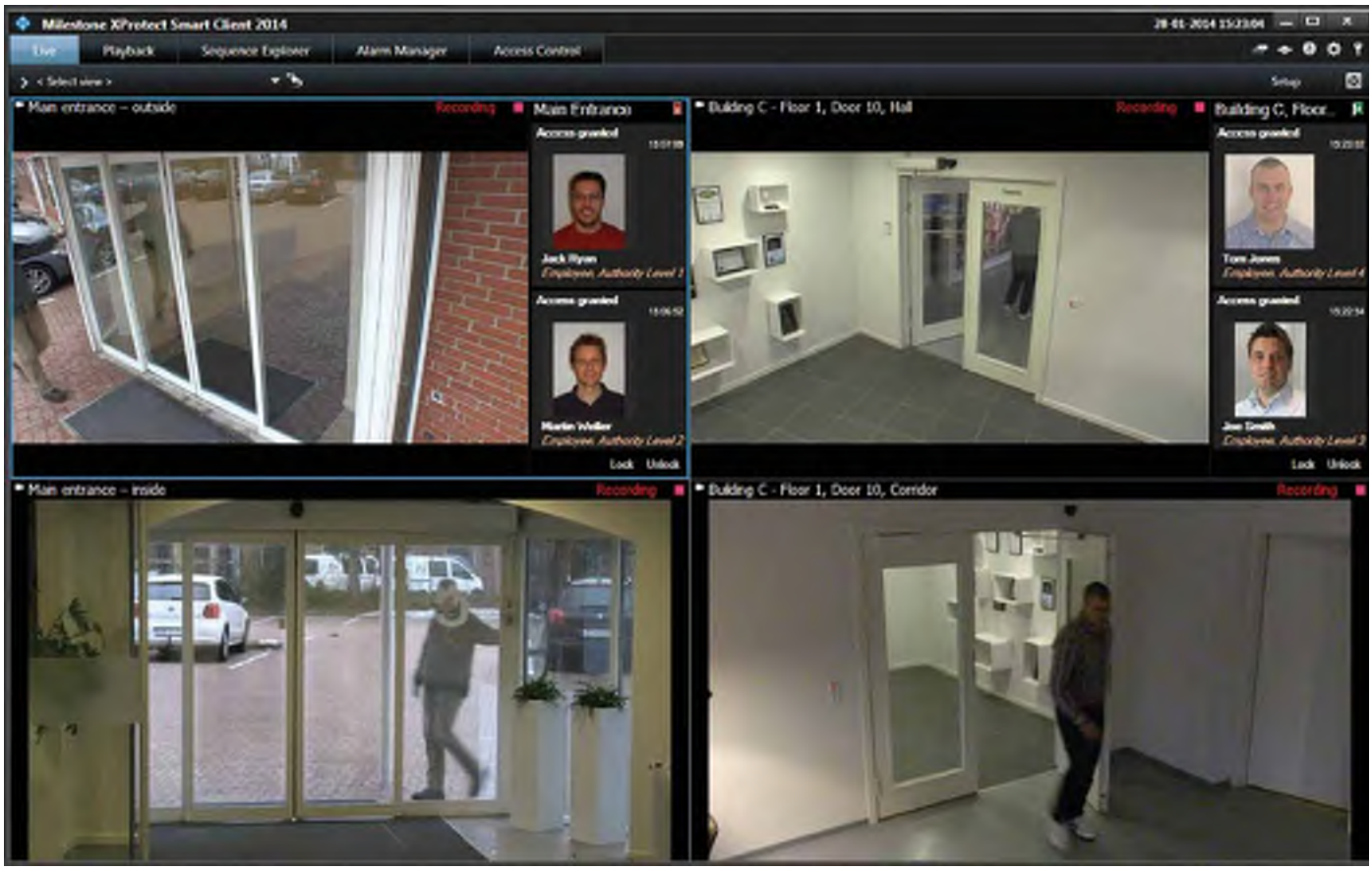


### ◇ Improve efficiency

With the primary and most commonly used access control functions as an integral part of XProtect Smart Client, XProtect Access Control Module eliminates the need for users to work with multiple independent systems.

### ◇ Integrate multiple systems

Multiple access control systems, as well as systems from different vendors, can be controlled by XProtect Smart Client. Through the Milestone Solution Partner program, Milestone offers a number of pre-integrated access control solutions with market-leading vendors.

### ◇ Optimize operations

A dedicated Access Control tab in XProtect Smart Client provides an overview of access control events for live monitoring, investigations and reporting. Instant access request notifications with corresponding video and cardholder information enable immediate visual validation of people requesting access.

# XProtect Smart Wall

## Comprehensive video overview

XProtect Smart Wall is an advanced video wall product that provides a complete overview of large surveillance centers. Intuitive configuration tools allow users to easily populate preset layouts by dragging and dropping camera icons or using the powerful rules engine. XProtect Smart Wall supports any amount or combination of monitors regardless of manufacturer and runs on standard servers and displays.

### Flexible layout

Users can create an efficient working environment by setting up rules so that XProtect Smart Wall camera views and layouts are automatically populated to meet defined surveillance situations in conjunction with specific incidents such as nightshifts.

### Hardware independent

XProtect Smart Wall supports any number or combination of monitors regardless of manufacturer, runs on standard servers and displays and does not require special video wall hardware making XProtect Smart Wall a cost-effective solution.

### Improve response time

Displays all the video data in an installation and gives a complete overview of large surveillance centers. Operators can focus on the most critical matters and coordinate response activities because multiple users can be shown the same view.

# XProtect LPR

## Automatic vehicle license plate detection

XProtect LPR is license plate recognition (LPR) software that reads license plate information and links the license plate number with video. It is a simple way to control vehicle access, for example, for entrance/exit barriers, parking spaces and toll gates. XProtect LPR can send a notification when a certain license plate is detected, enabling users to quickly take action.

### Accurately identify

XProtect LPR is based on one of the most reliable license plate engines available, with high-recognition performance and low error rates. With an optimal camera setup, XProtect LPR ensures passing vehicles are identified accurately.

### Loss prevention tool

Using negative lists and third-party integrations, the system is designed to automatically disengage a fuel pump if the same blacklisted vehicle license plate is recognized at any station.

### Regulate access

Instead of issuing toll collection devices such as smart cards or radio frequency identification (RFID) tags, XProtect LPR can automatically open a parking lot gate when a permitted license plate is detected, reducing costs and optimizing processes.

# XProtect Transact

## Monitor POS and ATM activity

XProtect Transact is software that directly links video with transaction data from point-of-sale (POS) systems or automated teller machines (ATMs). Transactions and corresponding video can be monitored live or viewed later. Users can perform a text search on one cash register/till at a time to identify transactions with, for example, gift cards, credit cards, coupons or returned merchandise.

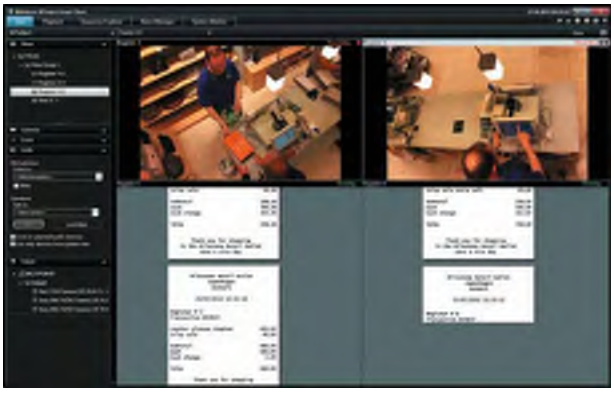

### Real-time monitoring

Video and transaction receipts are displayed alongside one another so users can easily verify if goods are being scanned correctly.

### Receive specific notifications

Receive notifications each time specific products are scanned. This notification can also trigger an event to change frame rate, start recording, raise an alarm or move a pan-tilt-zoom (PTZ) camera to a fixed preset, ensuring that video evidence of the incident is recorded.

### Investigate transactions

Search for specific text strings in the receipt line from a cash register. The search results provide a time-synchronized interface displaying video from the corresponding camera at a specific time.

# XProtect Retail

## Optimize store operations and increase profits

XProtect Retail is an investigation tool for performing advanced transaction data analysis to help retailers optimize store operations and increase profits by identifying fraud and reducing shrinkage. Based on transaction data from POS systems or ATMs typically gathered in enterprise resource planning (ERP) systems, XProtect Retail links data with corresponding video from relevant cameras.

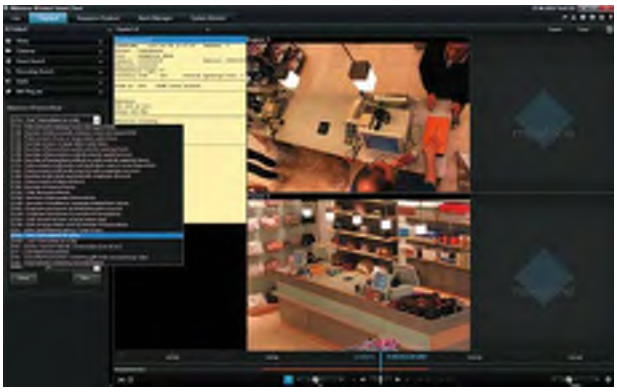

### Efficiently identify fraud

Video sequences can be linked with receipt and transaction data gathered from the POS system, ERP system or ATMs. XProtect Retail helps reduce fraud by identifying and sending alerts about suspicious activity.

### Monitor self-checkouts

Transaction data is displayed alongside corresponding video of the transaction in the software. Incidents can be efficiently tracked and video data can be exported and handed over to the proper authorities.

### Search video data

Search transaction and video data from specific cash registers/tills to find abnormal transactions or frequently repeated transaction patterns.

# XProtect Screen Recorder

## Inconspicuous screen recording

XProtect Screen Recorder is a function that enables Milestone software to inconspicuously capture screen recordings of any Microsoft® Windows®-based computer or point-of-sale terminal. Manage loss and fraud by monitoring the use of business systems and documenting customer transactions. Captured screen recordings are managed identically to camera recordings and can be viewed in live and playback mode and exported for evidence.

### Easily create evidence

Captured screen recordings of transactions provide an account of fraudulent activity.

### Increase productivity

Monitor critical activities to ensure operations are running efficiently.

### Improve training

Use recordings to educate staff and evaluate behavior and activities.

# Milestone Customer Dashboard

## System monitoring for optimal operation

Milestone Customer Dashboard is an online system monitoring service that enables resellers to obtain real-time system status of customer installations. With this system monitoring service, resellers can keep track of technical incidents in the system and proactively solve them before they become a problem to the user.

### Instant notification

Resellers can monitor technical incidents from any customer installation connected to the Internet. When away from the computer, resellers can get instant notification of any system error via email.

### Customer satisfaction

Resellers can proactively monitor installations so they can solve issues before they become a problem for the customer. Resellers can also use the Milestone Customer Dashboard to offer an enhanced service agreement and expand businesses.

### Zero startup time

No setup is required to use the Milestone Customer Dashboard. The service must be enabled in the Management Application and the installation requires Milestone Care Plus.

# Milestone Care

## A level of support for every installation

Milestone Care is a suite of maintenance and support services for Milestone products, and a supplementary offering to the support provided by Milestone resellers and integrators. Milestone Care consists of four different service packages, ranging from online-based self-help to a customizable offering with dedicated technical account management. The various packages offer Milestone customers flexibility and enable them to select the level of service and support their installation, and business, requires.

### The packages

- Milestone Care Basic – The base package is included with every Milestone product. It provides access to the online eCare portal, a series of self-help guides, eLearning modules and chat assistance for Milestone product users.
- Milestone Care Plus* – The second level provides resellers' access to the Milestone Customer Dashboard and offers a 100% trade-in credit on the current Milestone product when upgrading to a newer or more advanced product.
- Milestone Care Premium – The third level providers 24/7 technical support in local languages and access to the Case Management tool.
- Milestone Care Elite – The highest service level offers service level agreements with committed response and resolution times and a dedicated Milestone technical account manager.

**) Milestone Care Plus replaces the Software Upgrade Plan (SUP).*

# Encoder licensing

## It's an evolution, not a revolution

The transition from analog to IP for surveillance installations is not a revolution, it's an evolution. Beginning in 2014, the industry's most reliable and scalable solution is even more obtainable. With Milestone, users can take a proactive approach to moving to IP, seamlessly integrating existing analog security systems.

### Only one license required

Milestone has changed the licensing policy for all analog-to-IP encoders that are connected to XProtect software. Now, only one license is needed for each analog-to-IP encoder, providing an effective way to transition and enjoy the benefits of IP now and in the future. Users can gain the operational benefits of IP and easily upgrade to new equipment and technologies.

With the goal of all surveillance installations gaining the security and operational benefits of IP, Milestone provides a true open platform, flexible VMS and easily scalable products that help customers move to IP at their pace and within their budget.

Milestone Systems

# Product comparison chart

| Products | Type of installation | Number of supported cameras | XProtect Smart Client | XProtect Web Client | Milestone Mobile | XProtect Access Control Module | XProtect Smart Wall | XProtect LPR | XProtect Transact | XProtect Retail | XProtect Screen Recorder | Milestone Interconnect | Milestone Customer Dashboard | Third-party integration (MIP SDK) | Milestone Care Plus* |
|---|---|---|---|---|---|---|---|---|---|---|---|---|---|---|---|
| **XProtect Advanced VMS Products** | | | | | | | | | | | | | | | |
| **XProtect Expert** | Multi-server and centrally manage | ∞ | ✓ | ✓ | ✓ | ✓ | Supported | ✓ | ✓ | ✓ | ✓ | Supported | | ✓ | Manda-tory 1 year |
| **XProtect Corporate** | Multi-server and centrally manage | ∞ | ✓ | ✓ | ✓ | ✓ | Included | ✓ | ✓ | ✓ | ✓ | Manage-ment and supported | | ✓ | Manda-tory 1 year |
| **XProtect Professional VMS Products** | | | | | | | | | | | | | | | |
| **XProtect Go** | Single server | 8 | ✓ | ✓ | ✓ | | | | | | ✓ | | | | |
| **XProtect Essential** | Single server | 26 | ✓ | ✓ | ✓ | | | | | | ✓ | Supported | Supported | | Included 1 year |
| **XProtect Express** | Single server | 48 | ✓ | ✓ | ✓ | ✓ | | ✓ | ✓ | ✓ | ✓ | Supported | Supported | ✓ | Included 1 year |
| **XProtect Professional** | Multi-server | ∞[1] | ✓ | ✓ | ✓ | ✓ | | ✓ | ✓ | ✓ | ✓ | Supported | Supported | ✓ | Optional |
| **XProtect Enterprise** | Multi-server | ∞[1] | ✓ | ✓ | ✓ | ✓ | | ✓ | ✓ | ✓ | ✓ | Supported | Supported | ✓ | Optional |
| **Milestone Husky NVR Series** | | | | | | | | | | | | | | | |
| **Milestone Husky M10** | Single server, fanless | 4-8 | | ✓ | ✓ | | | | | | ✓ | Supported | Supported | | Included 3 year |
| **Milestone Husky M30** | Multi-server, workstation | 10-20 | ✓ | ✓ | ✓ | | | ✓ | ✓ | ✓ | ✓ | Supported | Supported | ✓ | Included 3 year |
| **Milestone Husky M50** | Multi-server, rack mounted | 10-80 | ✓ | ✓ | ✓ | | | ✓ | ✓ | ✓ | ✓ | Supported | Supported | ✓ | Included 3 year |

(1) XProtect Professional supports up to 64 cameras per server and for most installations larger than 250 cameras, Milestone recommends using XProtect Expert or XProtect Corporate.

* See page 41 for details about Milestone Care Plus

Follow us at:

Milestonesys.com
Twitter.com/milestonesys
LinkedIn.com/milestonesys
Youtube.com/milestonesys

# Milestone worldwide

- **Milestone Systems Germany**
  Tel: + 49 2102 30768-900
- **Milestone Systems France**
  Tel: + 33 1 75 61 06 30
- **Milestone Italia S.r.l.**
  Tel: + 39 02 4979 2717
- **Milestone UK & Ireland**
  Tel: + 44 (0) 1332 869380
- **Milestone Spain S.L.**
  Tel: + 34 669 483 312
- **Milestone Systems Bulgaria**
  Tel: + 35 92 4426172
- **Milestone Systems Russia**
  Tel: + 7 (495) 424 95 59
- **Milestone Incubation Center, US**
  Tel: + 1 877 350 1101
- **Milestone Sistemas do Brasil**
  Tel: + 55 (11) 21374421
- **Milestone Systems Lebanon**
  Tel: + 961 70 876 491
- **Milestone Systems Mexico**
  Tel: + 52 (55) 5208-2854
- **Milestone Systems Korea**
  Tel: + 82 2 2015 7781
- **Milestone Systems China**
  Tel: + 86 (21) 5179 8595
- **Milestone Systems Singapore**
  Tel: + 65 6678 7678
- **Milestone Systems Saudi Arabia**
  Tel: + 966-544333133
- **Milestone Systems Japan**
  Tel: + 81 (0)3-6860-8462
- **Milestone Systems India**
  Tel: + 919740608024
- **Milestone Systems UAE**
  Tel: + 97 14 3641380
- **Milestone Systems Australia**
  Tel: + 61 3 9016 7877
- **Milestone Systems South Africa**
  Tel: + 27 76 811 7495

**Milestone Systems HQ, DK**
Tel: +45 88 300 300

**Milestone Systems, US**
Tel: +1 503 350 1100

Milestone Systems has 20 offices worldwide and is distributed in more than 100 countries. For more information on how to contact us and to obtain purchase information please visit our website at milestonesys.com.

General inquiries
info@milestonesys.com

Sales inquiries
sales@milestonesys.com

**About Milestone Systems**

Milestone Systems is a global industry leader in open platform IP video management software, founded in 1998 and now operating as a stand-alone company in the Canon Group. Milestone technology is easy to manage, reliable and proven in thousands of customer installations, providing flexible choices in network hardware and integrations with other systems. Sold through partners in more than 100 countries, Milestone solutions help organizations to manage risks, protect people and assets, optimize processes and reduce costs..

For more information visit: www.milestonesys.com

Milestone XProtect, Milestone Husky, Milestone Interconnect and Milestone Federated Architecture are registered or trademarks of Milestone Systems.
© 2015 Milestone Systems. All rights reserved.

Milestone Product Catalog 23. 09. 2015

Arecont Vision®

Leading the Way in Megapixel Video™

# SurroundVideo® Omni IP Megapixel Cameras

## 12MP WDR or 20MP H.264 All-in-One Omni-Directional User-Configurable Multi-Sensor True Day/Night Indoor/Outdoor Dome IP Cameras

Multi-Sensor Omni

### Camera Models

| 12 Megapixel | 20 Megapixel |
|---|---|
| AV12176DN-NL | AV20175DN-NL |
| AV12176DN-28 | AV20175DN-28 |
| AV12176DN-08 | AV20175DN-08 |

### Description:

Delivering revolutionary flexibility, Arecont Vision SurroundVideo® Omni multi-sensor, multi-megapixel cameras provide ample resolution to zoom-in for details in live and recorded video. With multiple imagers, each with a choice of an IR corrected lens, one SurroundVideo® Omni can replace 4 standard cameras, requiring just a single installation with only one ethernet cable.

A unique track design allows four individual sensor gimbals to be independently placed in nearly any configuration. Popular uses of SurroundVideo® Omni IP66 rated / IK-10 impact-resistant cameras are to cover the intersection of hallways or to provide a 270° view at the corner of a building.

SurroundVideo® Omni cameras are available in total resolutions of 12 megapixels (MP) or 20 megapixels. Optional lenses can be selected from a choice of 2.8, 4, 6, 8, 12 and 16mm. Wide Dynamic Rage (WDR) that delivers up to 100dB at full resolution is available in the 12MP model. H.264 compression reduces bandwidth and storage requirements, while delivering full frame rates and resolution, without sacrificing image quality.

**Omni-Directional Track with 4 Customizable Sensors**

**270° FOV Capable**

**Wide Dynamic Range on 12MP Models**

**True Day/Night with IR Cut Filter**

**Pixel Binning Mode**

**Dual Encoder H.264/MJPEG**

**Ultra Low Profile Design**

**Impact / Weather Resistant IK-10 and IP66 Rated**

### Features:

- 12MP WDR and 20MP Configurations
- Up to 4 Individual Camera Gimbals can be Independently Placed in Any Orientation Around a 360° Track with Extra Positions for Looking Straight Down
- Multiple Lens Options in a Single Camera Housing from 2.8mm up to 16mm
- True WDR up to 100dB at Full Resolution: See Clearly in Shaded and Bright Light Conditions Simultaneously
- True Day/Night Functionality with Mechanical IR Cut Filter
- Binning Mode for Strong Low Light Performance
- Forensic Zooming – Zoom Live or After the Event While Recording Full Field-of-View in HD – Replace PTZ Devices
- Fast Frame Rates
- Privacy Mask, Motion Detection, Flexible Cropping, Bit Rate Control and Multi-Streaming
- Dual Encoder H.264/MJPEG
- PoE and Auxiliary Power: 12–48V DC/24V AC
- Ultra Discrete, Low-Profile Housing
- Outdoor Rated IP66 and IK-10 Impact-Resistant Housing
- Complete Mounting Options
- Reduced Overall System Cost

### Model Specific Features

| Model | Resolution | Frame Rate | Features | |
|---|---|---|---|---|
| **AV12176DN-NL** | 12MP | 5.2fps | WDR | Binning |
| **AV12176DN-28** | 12MP | 5.2fps | WDR | Binning |
| **AV12176DN-08** | 12MP | 5.2fps | WDR | Binning |
| **AV20175DN-NL** | 20MP | 3.5fps | | Binning |
| **AV20175DN-28** | 20MP | 3.5fps | | Binning |
| **AV20175DN-08** | 20MP | 3.5fps | | Binning |

### Options

| | |
|---|---|
| **-NL** | No Lenses (User Configurable and Ordered Separately) |
| **-28** | Configured with 2.8mm Lenses* |
| **-08** | Configured with 8mm Lenses** |

* Good option for a 270° Corner Mount configuration
** Good configuration option for a hallway intersection

ONVIF | S

## Camera Imaging

| Model | | AV12176DN | | AV20175DN | |
|---|---|---|---|---|---|
| Image Sensor | | 4 x 3MP CMOS | | 4 x 5MP CMOS | |
| Optical Format | | 1/3.2" | | 1/2.5" | |
| Pixel Pitch | | 2.2µm | | 2.2µm | |
| Minimum Illumination | | Color | 0.5 Lux | Color | 0.3 Lux |
| | | Color Binning | 0.15 Lux | Color Binning | 0.15 Lux |
| | | Day/Night | 0 Lux, IR sensitive | Day/Night | 0 Lux, IR sensitive |
| Full Field of View (FOV) Resolution | | Total | 8192 H x 1536 V | Total | 10240 H x 1920 V |
| | | Per Sensor | 2048 H x 1536 V | Per Sensor | 2560 H x 1920 V |
| 1/4 Resolution | | Total | 4096 H x 768 V | Total | 5120 H x 960 V |
| | | Per Sensor | 1024 H x 768 V | Per Sensor | 1280 H x 960 V |
| Dynamic Range | | Up to 100dB at Full Resolution | | 70.1dB | |
| Lens | 2.8mm Lens Option (-28 Models) | 2.8mm, F/1.8", H-FOV = 89° | | 2.8mm, F/1.8", H-FOV = 113° | |
| | 8mm Lens Option (-08 Models) | 8mm, F/1.6", H-FOV = 33° | | 8mm, F/1.6", H-FOV = 40° | |
| Video Frame Rates | | Max | 5.2fps (8192 x 1536) | Max | 3.5fps (10240 x 1920) |
| | | 16.7fps (4096 x 768) | | 11fps (5120 x 960) | |

## Data Transmission

| | |
|---|---|
| Compression Type | H.264 (MPEG-4, Part 10)/Motion JPEG |
| | 21 levels of quality |
| Network Protocols | RTSP, RTP/TCP, RTP/UDP, HTTP, DHCP, TFTP |
| Network Interface | 100Base-T Ethernet |
| Multi-Streaming | 8 non-identical streams (2 per sensor) |

## Programmability

- Auto adjustment between WDR and LDR modes (12MP Models)
- Binning Mode
- Privacy mask
- Flexible Cropping (resolution windowing down to 1x1 pixel for JPEG and 2x2 pixels for H.264)
- Auto Exposure (AE) and Gain Control (AGC) > 120dB
- On-camera real-time motion detection with up to 1024 detection zones (per sensor)
- Auto multi-matrix white balance
- 50/60Hz selectable flicker control
- Electronic pan, tilt, zoom (PTZ)
- Programmable shutter speed to help control motion blur
- MoonLight™ Mode: extended exposure and proprietary noise cancellation
- Programmable resolution, brightness, saturation, gamma, sharpness, tint
- Simultaneous delivery of full field-of-view and zoomed images
- Bandwidth and storage savings by running at 1/4 resolution
- Bit rate and bandwidth limit control

## Compliance

| | |
|---|---|
| Industry Standard | ONVIF Profile S Conformant |
| Listings | UL (CB) |
| FCC Compliance | 47 CFR 15 Class A |
| Environmental | RoHS, REACH, WEEE |

## Environmental

| | |
|---|---|
| Protection Ratings | IP66 water/dust protection rating |
| | IK-10 impact-resistant polycarbonate dome |
| Operating temperature | -40°C (-40°F) to +50°C (122°F) |
| Humidity | 0% to 90% (non-condensing) |
| Stable image temperature | 0°C (32°F) to +50°C (122°F) |
| Storage temperature | -40°C (-40°F) to +60°C (140°F) |

## Electrical

| | |
|---|---|
| Input/Output | General purpose opto-coupled |
| Power Over Ethernet | PoE 802.3af, Class 3 |
| Auxiliary Power | 12–48V DC and 24V AC |
| Max Power Consumption | 14 Watts Max (Auxiliary Power) |

## Mechanical

| | | |
|---|---|---|
| Casing | Die-cast aluminum chassis with polycarbonate dome bubble | |
| | IP66 weather proof standard | |
| | Impact resistant, IK-10 rated | |
| Gimbal | Easily adjustable, 2-axis w/360° pan and 90° tilt | |
| Total Unit Dimensions | Unit | Ø 7.7" (196mm) x 3.1" H (78.5mm) |
| | Bubble Only | Ø 6.7" (169.2mm) x 1.3" H (33.4mm) |
| Weight | Unit | 2.8lbs (1.27kg) |
| | Packaged | 3.4lbs (1.54kg) |

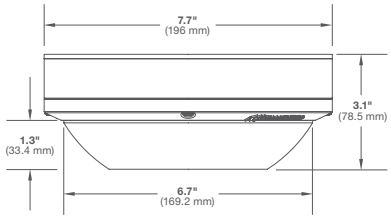


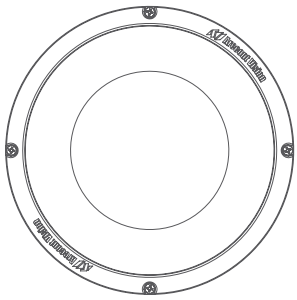

## Lens Options

| Focal Length | | 2.8mm | 4mm | 6mm | 8mm | 12mm | 16mm |
|---|---|---|---|---|---|---|---|
| F Stop | | F1.8 | F1.6 | F1.6 | F1.6 | F1.6 | F1.6 |
| Horiz. FOV | 3MP WDR | 89 | 63 | 43 | 33 | 22 | 16 |
| | 5MP | 113 | 80 | 55 | 40 | 28 | 20 |
| Option | | Standard (-28 Models) | Ordered Separately | Ordered Separately | Standard (-08 Models) | Ordered Separately | Ordered Separately |
| Part Number | | MPM2.8 | MPM4.0 | MPM6.0 | MPM8.0 | MPM12.0 | MPM16.0 |

Made in the USA

Arecont Vision®

©2015 Arecont Vision. Specification sheets subject to change without notice.

+1.818.937.0700 | 877.CAMERA.8 | www.arecontvision.com | avsales@arecontvision.com

**Accessories**

| | |
|---|---|
| SO-CAP | Cap for SurroundVideo® Omni |
| AV-WMJB | Wall Mount Bracket with Junction Box |
| AV-PMJB | Pendant Mount Bracket with Junction Box |
| AV-PMA | Pole Mount Adapter |
| AV-CRMA | Corner Mount Adapter |
| SV-EBA | Electrical Box Adapter |

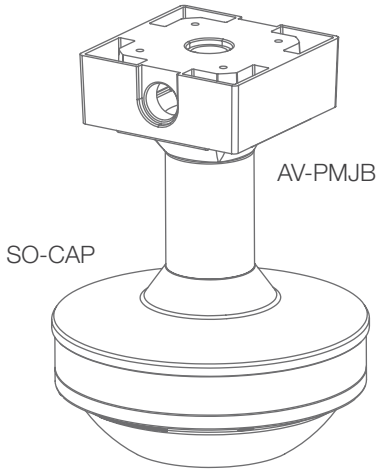


**Ceiling Mount Configuration**

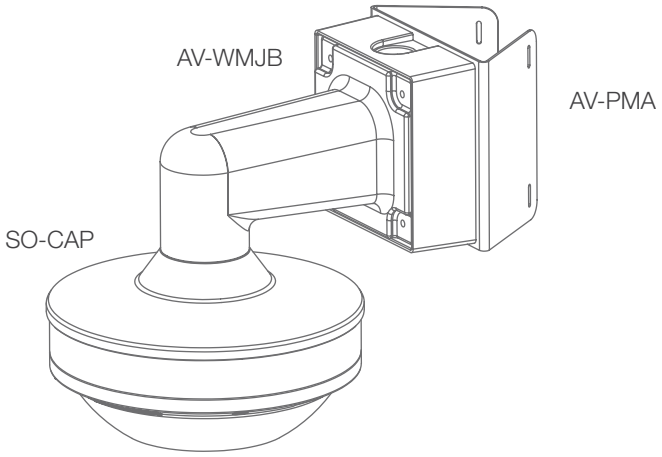


**Wall Mount Configuration with Pole Mount Adapter**

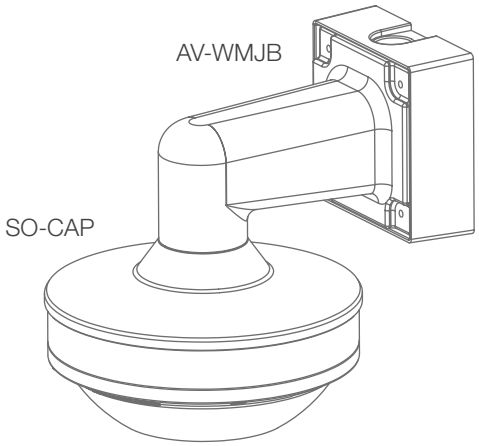


**Wall Mount Configuration**

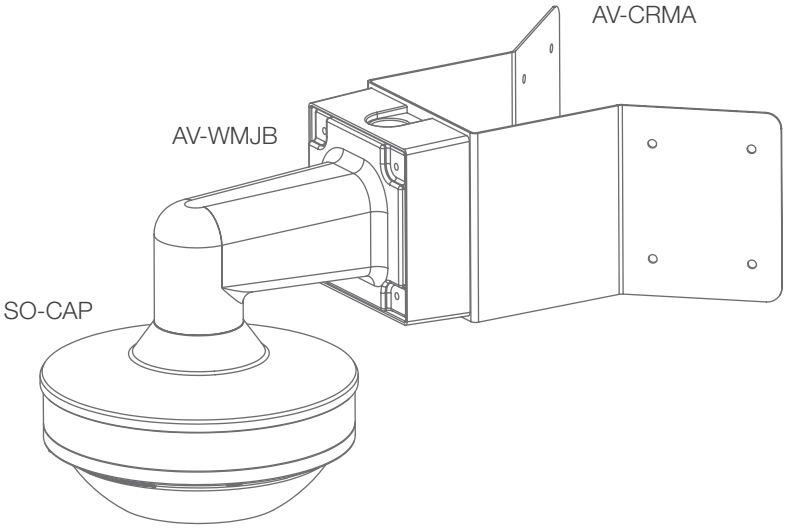


**Wall Mount Configuration with Corner Mount Adapter**

Cameras Made in the USA

Arecont Vision®

 ©2015 Arecont Vision. Specification sheets subject to change without notice.

+1.818.937.0700 | 877.CAMERA.8 | www.arecontvision.com | avsales@arecontvision.com

# AXIS P3224-LVE Network Camera

## Outdoor-ready and optimized for forensic video in HDTV 720p

AXIS P3224-LVE is an outdoor-ready, streamlined fixed dome providing HDTV 720p video quality. It features a varifocal lens and remote zoom and focus, which eliminates the need for hands-on fine tuning. The day and night functionality, together with OptimizedIR and P-Iris control, ensure superb image quality in any lighting conditions. Axis' built-in IR solution, OptimizedIR, automatically adapts to the zoom level set at installation, ensuring an evenly illuminated image. WDR – Forensic Capture increases forensic usability by highlighting details in both dark and well lit areas. Zipstream lowers bandwidth and storage requirements. AXIS P3224-LVE is IK10-rated, making it resistant to vandalism.

- > HDTV 720p video quality
- > Outdoor-ready and IK10-rated
- > Remote zoom and focus
- > WDR - Forensic Capture
- > OptimizedIR illumination
- > Axis' Zipstream technology

1499967/EN/M3.2/082015

# AXIS P3224-LVE Network Camera

| | |
|---|---|
| **Camera** | |
| **Image sensor** | Progressive scan RGB CMOS 1/2.8" |
| **Lens** | Varifocal, 3.0–10.5 mm, F1.4<br>Horizontal angle of view 92°–34°<br>Vertical angle of view 50°–20°<br>Remote focus and zoom, P-Iris control, IR corrected |
| **Day and night** | Automatically removable infrared-cut filter |
| **Minimum illumination** | **HDTV 720p 25/30 fps with WDR - Forensic Capture:**<br>Color: 0.25 lux, F1.4<br>B/W: 0.05 lux, F1.4, 0 lux with IR illumination on<br>**HDTV 720p 50/60 fps:**<br>Color: 0.5 lux, F1.4<br>B/W: 0.1 lux, F1.4, 0 lux with IR illumination on |
| **Shutter time** | 1/142850 s to 2 s |
| **Camera angle adjustment** | Pan ±180°, tilt -5 to +75°, rotation ±95° |
| **Video** | |
| **Video compression** | H.264 Baseline, Main and High Profile (MPEG-4 Part 10/AVC)<br>Motion JPEG |
| **Resolutions** | 1280x960 to 160x90 |
| **Frame rate** | **With WDR:** 25/30 fps with power line frequency 50/60 Hz<br>**Without WDR:** 50/60 fps with power line frequency 50/60 Hz |
| **Video streaming** | Multiple, individually configurable streams in H.264 and Motion JPEG<br>Axis' Zipstream technology in H.264<br>Controllable frame rate and bandwidth, VBR/MBR H.264 |
| **Multi-view streaming** | 2 individually cropped out view areas |
| **Image settings** | Compression, Color, Brightness, Sharpness, Contrast, White balance, Exposure control (including automatic gain control), Exposure zones, Backlight compensation, Fine tuning of behavior at low light, WDR - Forensic Capture: Up to 120 dB depending on scene, Local contrast, Text and image overlay, Mirroring of images, Privacy masks<br>Rotation: 0°, 90°, 180°, 270°, including Corridor Format |
| **Pan/Tilt/Zoom** | Digital PTZ |
| **Network** | |
| **Security** | Password protection, IP address filtering, HTTPS[a] encryption, IEEE 802.1X[a] network access control, Digest authentication, User access log, Centralized Certificate Management |
| **Supported protocols** | IPv4/v6, HTTP, HTTPS[a], SSL/TLS[a], QoS Layer 3 DiffServ, FTP, CIFS/SMB, SMTP, Bonjour, UPnP™, SNMP v1/v2c/v3(MIB-II), DNS, DynDNS, NTP, RTSP, RTP, SFTP, TCP, UDP, IGMP, RTCP, ICMP, DHCP, ARP, SOCKS, SSH |
| **System integration** | |
| **Application Programming Interface** | Open API for software integration, including VAPIX® and AXIS Camera Application Platform; specifications at *www.axis.com*<br>AXIS Video Hosting System (AVHS) with One-Click Connection<br>ONVIF Profile S, specification at *www.onvif.org* |
| **Analytics** | Video motion detection, Active tampering alarm<br>Support for AXIS Camera Application Platform enabling installation of AXIS Video Motion Detection 3, AXIS Cross Line Detection, AXIS Digital Autotracking and third-party applications, see *www.axis.com/acap* |
| **Event triggers** | Analytics, Edge storage events |
| **Event actions** | File upload: FTP, SFTP, HTTP, HTTPS, network share and email<br>Notification: email, HTTP, HTTPS, TCP and SNMP trap<br>Video recording to edge storage<br>Pre- and post-alarm video buffering<br>Send video clip<br>Overlay text<br>IR illumination on/off |
| **Data streaming** | Event data |
| **Built-in installation aids** | Remote zoom, Remote focus, Pixel counter, OptimizedIR with adjustable IR illumination angle and intensity |
| **General** | |
| **Casing** | Aluminum inner camera module with encapsulated electronics<br>IP66- and NEMA 4X-rated, IK10 impact-resistant casing with dehumidifying membrane<br>Color: white NCS S 1002-B<br>For repainting instructions of skin cover or casing and impact on warranty, contact your Axis partner. |
| **Memory** | 512 MB RAM, 256 MB Flash |
| **Power** | Power over Ethernet IEEE 802.3af/802.3at Type 1 Class 3, max 10.8 W, typical 3.9 W |
| **Connectors** | RJ45 10BASE-T/100BASE-TX PoE |
| **IR illumination** | OptimizedIR with power-efficient, long-life 850 nm IR LEDs with adjustable angle of illumination and intensity. Range of reach up to 25 m (82 ft) depending on scene |
| **Edge storage** | Support for microSD/microSDHC/microSDXC card<br>Support for recording to dedicated network-attached storage (NAS)<br>For SD card and NAS recommendations see *www.axis.com* |
| **Operating conditions** | -30 °C to 50 °C (-22 °F to 122 °F)<br>Humidity 10 to 100% RH (condensing) |
| **Storage conditions** | -40 °C to 65 °C (-40 °F to 149 °F) |
| **Approvals** | EN 55022 Class B, EN 61000-6-1, EN 61000-6-2, EN 55024, EN 50121-4, IEC 62236-4, FCC Part 15 Subpart B Class A and B, ICES-003 Class B, VCCI Class B, C-tick AS/NZS CISPR 22 Class B, KCC KN22 Class B, KN24<br>IEC/EN/UL 60950-1, IEC/EN/UL 60950-22, IEC/EN 62471<br>IEC 60068-2-1, IEC 60068-2-2, IEC 60068-2-14<br>IEC 60068-2-6 (vibration), IEC 60068-2-27 (shock), IEC 60068-2-30, IEC 60068-2-78, IEC/EN 60529 IP66, NEMA 250 Type 4X, IEC/EN 62262 IK10 |
| **Dimensions** | Height: 104 mm (4 1/16 in)<br>ø 149 mm (5 7/8 in) |
| **Weight** | 770 g (1.7 lb) |
| **Included accessories** | Installation Guide, Windows decoder 1-user license, Mounting bracket, Cable gasket, Resistorx T20 L-key, Drill template |
| **Optional accessories** | AXIS ACI Conduit Bracket A<br>AXIS ACI Conduit Adapters<br>AXIS T94M01L Recessed Mount Kit<br>AXIS T94T01D Pendant Kit including weather shield<br>AXIS T91 Mounts<br>AXIS T98A17-VE Surveillance Cabinet |
| **Video management software** | AXIS Camera Companion, AXIS Camera Station, Video management software from Axis' Application Development Partners available on *www.axis.com/techsup/software* |
| **Warranty** | Axis 3-year warranty and AXIS Extended Warranty option, see *www.axis.com/warranty* |

a. *This product includes software developed by the OpenSSL Project for use in the OpenSSL Toolkit. (www.openssl.org), and cryptographic software written by Eric Young (eay@cryptsoft.com).*

**More information is available at www.axis.com**

©2015 Axis Communications AB. AXIS COMMUNICATIONS, AXIS, ETRAX, ARTPEC and VAPIX are registered trademarks or trademark applications of Axis AB in various jurisdictions. All other company names and products are trademarks or registered trademarks of their respective companies. We reserve the right to introduce modifications without notice.

# AXIS P3225-LVE Network Camera

## Outdoor-ready and optimized for forensic video in HDTV 1080p

AXIS P3225-LVE is an outdoor-ready, streamlined fixed dome providing HDTV 1080p video quality. It features a varifocal lens and remote zoom and focus, which eliminates the need for hands-on fine tuning. The day and night functionality, together with OptimizedIR and P-Iris control, ensure superb image quality in any lighting conditions. Axis' built-in IR solution, OptimizedIR, automatically adapts to the zoom level set at installation, ensuring an evenly illuminated image. WDR – Forensic Capture increases forensic usability by highlighting details in both dark and well lit areas. Zipstream lowers bandwidth and storage requirements. AXIS P3225-LVE is IK10-rated, making it resistant to vandalism.

- > HDTV 1080p video quality
- > Outdoor-ready and IK10-rated
- > Remote zoom and focus
- > WDR - Forensic Capture
- > OptimizedIR illumination
- > Axis' Zipstream technology

1499969/EN/M3.2/082015

# AXIS P3225-LVE Network Camera

| | |
|---|---|
| **Camera** | |
| **Image sensor** | Progressive scan RGB CMOS 1/2.8" |
| **Lens** | Varifocal, 3.0–10.5 mm, F1.4<br>Horizontal angle of view 92°–34°<br>Vertical angle of view 50°–20°<br>Remote focus and zoom, P-Iris control, IR corrected |
| **Day and night** | Automatically removable infrared-cut filter |
| **Minimum illumination** | **HDTV 1080p 25/30 fps with WDR - Forensic Capture:**<br>Color: 0.25 lux, F1.4<br>B/W: 0.05 lux, F1.4, 0 lux with IR illumination on<br>**HDTV 1080p 50/60 fps:**<br>Color: 0.5 lux, F1.4<br>B/W: 0.1 lux, F1.4, 0 lux with IR illumination on |
| **Shutter time** | 1/142850 s to 2 s |
| **Camera angle adjustment** | Pan ±180°, tilt -5 to +75°, rotation ±95° |
| **Video** | |
| **Video compression** | H.264 Baseline, Main and High Profile (MPEG-4 Part 10/AVC)<br>Motion JPEG |
| **Resolutions** | 1920x1080 to 160x90 |
| **Frame rate** | **With WDR:** 25/30 fps with power line frequency 50/60 Hz<br>**Without WDR:** 50/60 fps with power line frequency 50/60 Hz |
| **Video streaming** | Multiple, individually configurable streams in H.264 and Motion JPEG<br>Axis' Zipstream technology in H.264<br>Controllable frame rate and bandwidth, VBR/MBR H.264 |
| **Multi-view streaming** | 2 individually cropped out view areas |
| **Image settings** | Compression, Color, Brightness, Sharpness, Contrast, White balance, Exposure control (including automatic gain control), Exposure zones, Backlight compensation, Fine tuning of behavior at low light, WDR - Forensic Capture: Up to 120 dB depending on scene, Local contrast, Text and image overlay, Mirroring of images, Privacy masks<br>Rotation: 0°, 90°, 180°, 270°, including Corridor Format |
| **Pan/Tilt/Zoom** | Digital PTZ |
| **Network** | |
| **Security** | Password protection, IP address filtering, HTTPS[a] encryption, IEEE 802.1X[a] network access control, Digest authentication, User access log, Centralized Certificate Management |
| **Supported protocols** | IPv4/v6, HTTP, HTTPS[a], SSL/TLS[a], QoS Layer 3 DiffServ, FTP, CIFS/SMB, SMTP, Bonjour, UPnP™, SNMP v1/v2c/v3(MIB-II), DNS, DynDNS, NTP, RTSP, RTP, SFTP, TCP, UDP, IGMP, RTCP, ICMP, DHCP, ARP, SOCKS, SSH |
| **System integration** | |
| **Application Programming Interface** | Open API for software integration, including VAPIX® and AXIS Camera Application Platform; specifications at *www.axis.com*<br>AXIS Video Hosting System (AVHS) with One-Click Connection<br>ONVIF Profile S, specification at *www.onvif.org* |
| **Analytics** | Video motion detection, Active tampering alarm<br>Support for AXIS Camera Application Platform enabling installation of AXIS Video Motion Detection 3, AXIS Cross Line Detection, AXIS Digital Autotracking and third-party applications, see *www.axis.com/acap* |
| **Event triggers** | Analytics, Edge storage events |
| **Event actions** | File upload: FTP, SFTP, HTTP, HTTPS, network share and email<br>Notification: email, HTTP, HTTPS, TCP and SNMP trap<br>Video recording to edge storage<br>Pre- and post-alarm video buffering<br>Send video clip<br>Overlay text<br>IR illumination on/off |
| **Data streaming** | Event data |
| **Built-in installation aids** | Remote zoom, Remote focus, Pixel counter, OptimizedIR with adjustable IR illumination angle and intensity |
| **General** | |
| **Casing** | Aluminum inner camera module with encapsulated electronics<br>IP66- and NEMA 4X-rated, IK10 impact-resistant casing with dehumidifying membrane<br>Color: white NCS S 1002-B<br>For repainting instructions of skin cover or casing and impact on warranty, contact your Axis partner. |
| **Memory** | 512 MB RAM, 256 MB Flash |
| **Power** | Power over Ethernet IEEE 802.3af/802.3at Type 1 Class 3, max 10.8 W, typical 3.9 W |
| **Connectors** | RJ45 10BASE-T/100BASE-TX PoE |
| **IR illumination** | OptimizedIR with power-efficient, long-life 850 nm IR LEDs with adjustable angle of illumination and intensity. Range of reach up to 25 m (82 ft) depending on scene |
| **Edge storage** | Support for microSD/microSDHC/microSDXC card<br>Support for recording to dedicated network-attached storage (NAS)<br>For SD card and NAS recommendations see *www.axis.com* |
| **Operating conditions** | -30 °C to 50 °C (-22 °F to 122 °F)<br>Humidity 10 to 100% RH (condensing) |
| **Storage conditions** | -40 °C to 65 °C (-40 °F to 149 °F) |
| **Approvals** | EN 55022 Class B, EN 61000-6-1, EN 61000-6-2, EN 55024, EN 50121-4, IEC 62236-4, FCC Part 15 Subpart B Class A and B, ICES-003 Class B, VCCI Class B, C-tick AS/NZS CISPR 22 Class B, KCC KN22 Class B, KN24<br>IEC/EN/UL 60950-1, IEC/EN/UL 60950-22, IEC/EN 62471<br>IEC 60068-2-1, IEC 60068-2-2, IEC 60068-2-14<br>IEC 60068-2-6 (vibration), IEC 60068-2-27 (shock), IEC 60068-2-30, IEC 60068-2-78, IEC/EN 60529 IP66, NEMA 250 Type 4X, IEC/EN 62262 IK10 |
| **Dimensions** | Height: 104 mm (4 1/16 in)<br>ø 149 mm (5 7/8 in) |
| **Weight** | 770 g (1.7 lb) |
| **Included accessories** | Installation Guide, Windows decoder 1-user license, Mounting bracket, Cable gasket, Resistorx T20 L-key, Drill template |
| **Optional accessories** | AXIS ACI Conduit Bracket A<br>AXIS ACI Conduit Adapters<br>AXIS T94M01L Recessed Mount Kit<br>AXIS T94T01D Pendant Kit including weather shield<br>AXIS T91 Mounts<br>AXIS T98A17-VE Surveillance Cabinet |
| **Video management software** | AXIS Camera Companion, AXIS Camera Station, Video management software from Axis' Application Development Partners available on *www.axis.com/techsup/software* |
| **Warranty** | Axis 3-year warranty and AXIS Extended Warranty option, see *www.axis.com/warranty* |

a. *This product includes software developed by the OpenSSL Project for use in the OpenSSL Toolkit. (www.openssl.org), and cryptographic software written by Eric Young (eay@cryptsoft.com).*

**More information is available at www.axis.com**

©2015 Axis Communications AB. AXIS COMMUNICATIONS, AXIS, ETRAX, ARTPEC and VAPIX are registered trademarks or trademark applications of Axis AB in various jurisdictions. All other company names and products are trademarks or registered trademarks of their respective companies. We reserve the right to introduce modifications without notice.

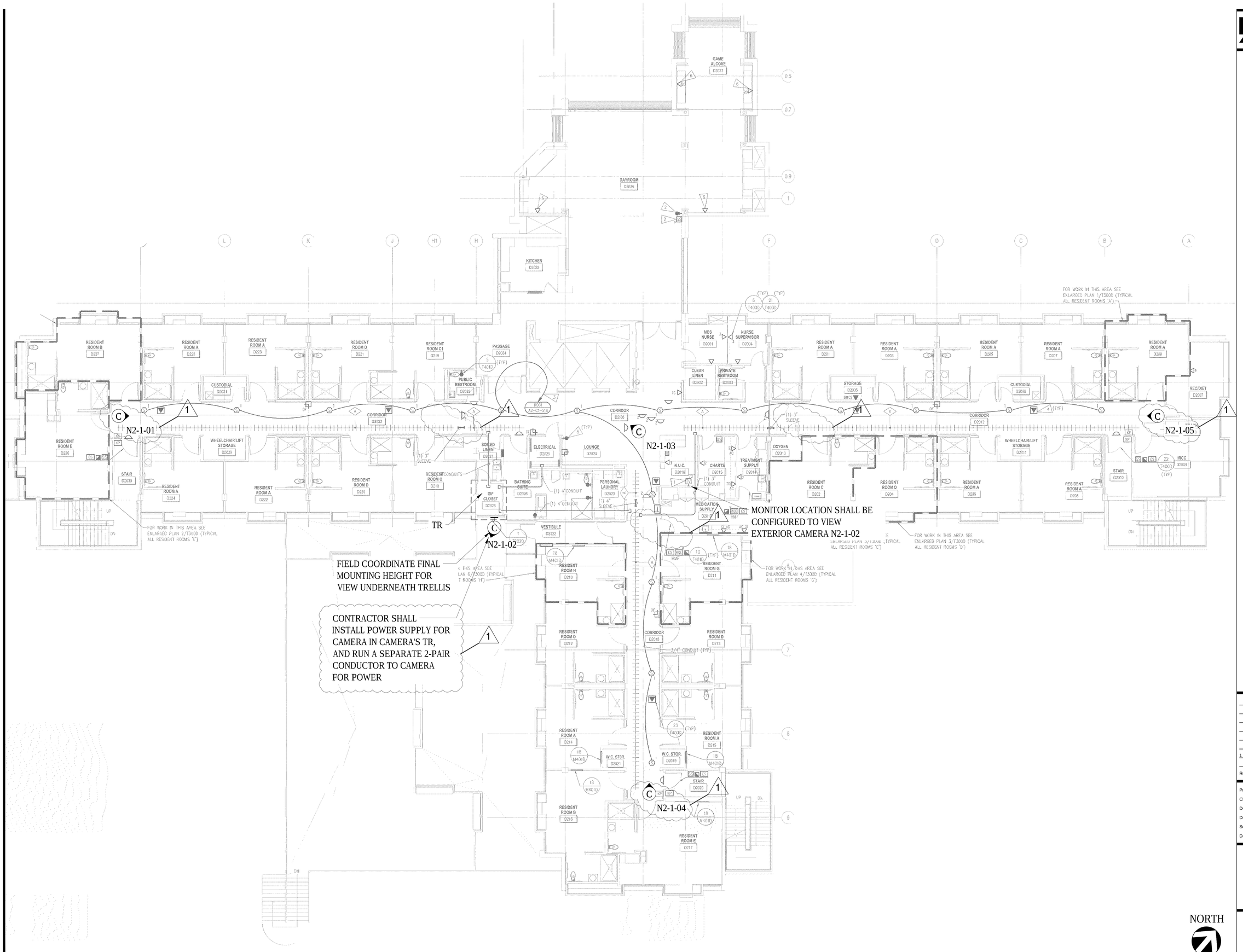


1 DACK - SECOND FLOOR PLAN
SCALE: 1/8" = 1'-0"

elert & associates
140 Third Street South
Stillwater, MN 55082
651.430.2772 fax: 651.430.2661
www.elert.com

# IOWA VETERAN'S HOME SECURITY CAMERA UPGRADE

## IOWA VETERAN'S HOME

1301 SUMMIT ST, MARSHALLTOWN, IA 50158

| Revision: | | Date: |
|---|---|---|
| 1 | ADDENDUM 1 | 01/26/2016 |
| | 100% CD | 12/31/2015 |

| | |
|---|---|
| Project No.: | |
| Checked By: | TP |
| Designed By: | TP/BF/JM |
| Drawn By: | MA/JM |
| Scale: | as shown |
| Date: | 12/31/2015 |

DACK - SECOND FLOOR PLAN

T201.2

Elert & Associates Copyright-All Rights Reserved

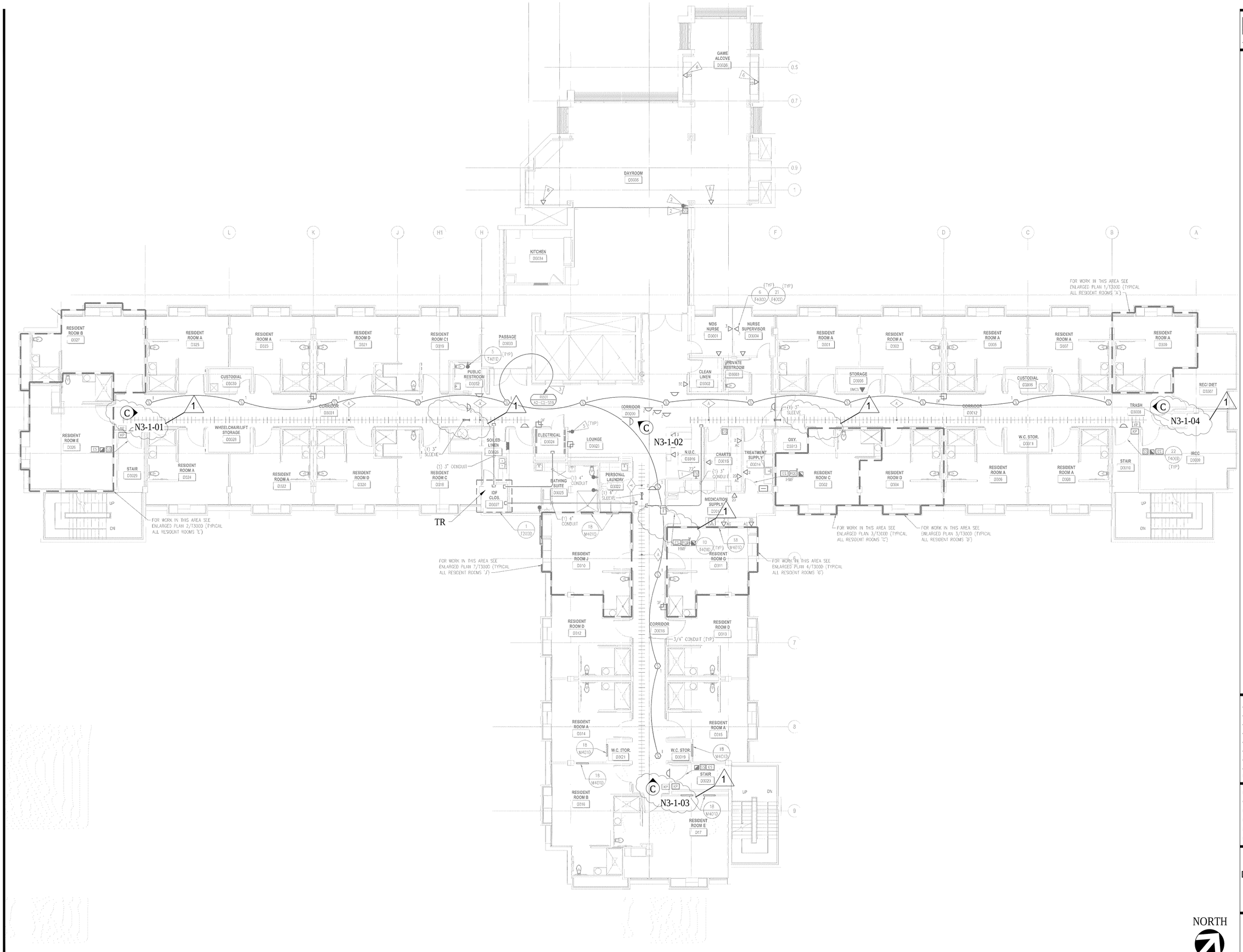


1 DACK - THIRD FLOOR PLAN
SCALE: 1/8" = 1'-0"

elert & associates
140 Third Street South
Stillwater, MN 55082
651.430.2772 fax: 651.430.2661
www.elert.com

# IOWA VETERAN'S HOME SECURITY CAMERA UPGRADE

## IOWA VETERAN'S HOME

1301 SUMMIT ST, MARSHALLTOWN, IA 50158

| Revision: | | Date: |
|---|---|---|
| 1 | ADDENDUM 1 | 01/26/2016 |
| | 100% CD | 12/31/2015 |

| | |
|---|---|
| Project No.: | |
| Checked By: | TP |
| Designed By: | TP/BF/JM |
| Drawn By: | MA/JM |
| Scale: | as shown |
| Date: | 12/31/2015 |

DACK - THIRD FLOOR PLAN

T201.3

Elert & Associates Copyright-All Rights Reserved

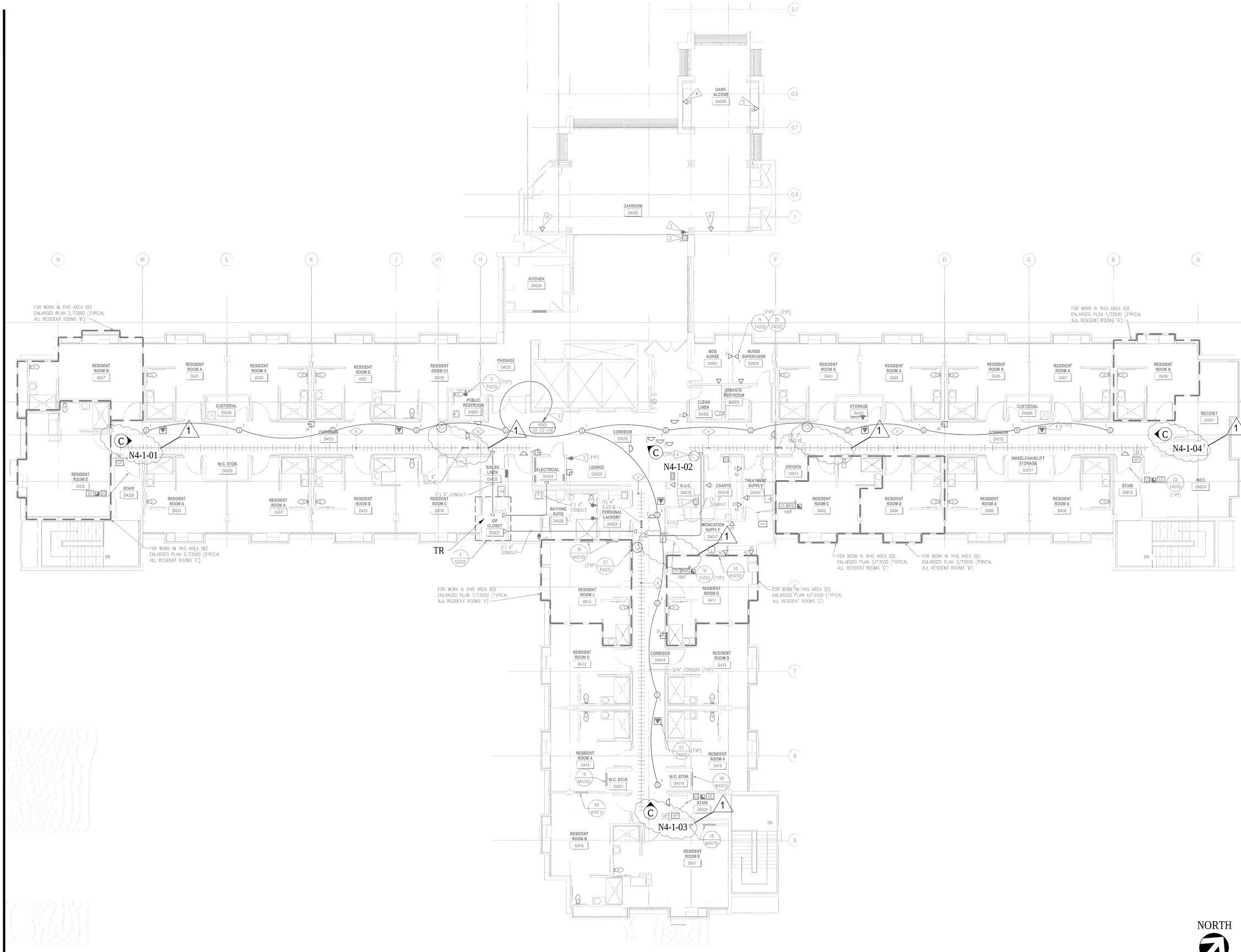


1 DACK - FOURTH FLOOR PLAN
SCALE: 1/8" = 1'-0"

NORTH

elert & associates
140 Third Street South
Stillwater, MN 55082
651.430.2772 fax: 651.430.2661
www.elert.com

# IOWA VETERAN'S HOME SECURITY CAMERA UPGRADE

IOWA VETERAN'S HOME
1301 SUMMIT ST, MARSHALLTOWN, IA 50158

| Revision: | | Date: |
|---|---|---|
| 1 | ADDENDUM 1 | 01/26/2016 |
| | 100% CD | 12/31/2015 |

| | |
|---|---|
| Project No.: | |
| Checked By: | TP |
| Designed By: | TP/BF/JM |
| Drawn By: | MA/JM |
| Scale: | as shown |
| Date: | 12/31/2015 |

DACK - FOURTH FLOOR PLAN

T201.4

Elert & Associates Copyright-All Rights Reserved

KEY PLAN

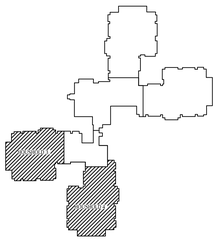

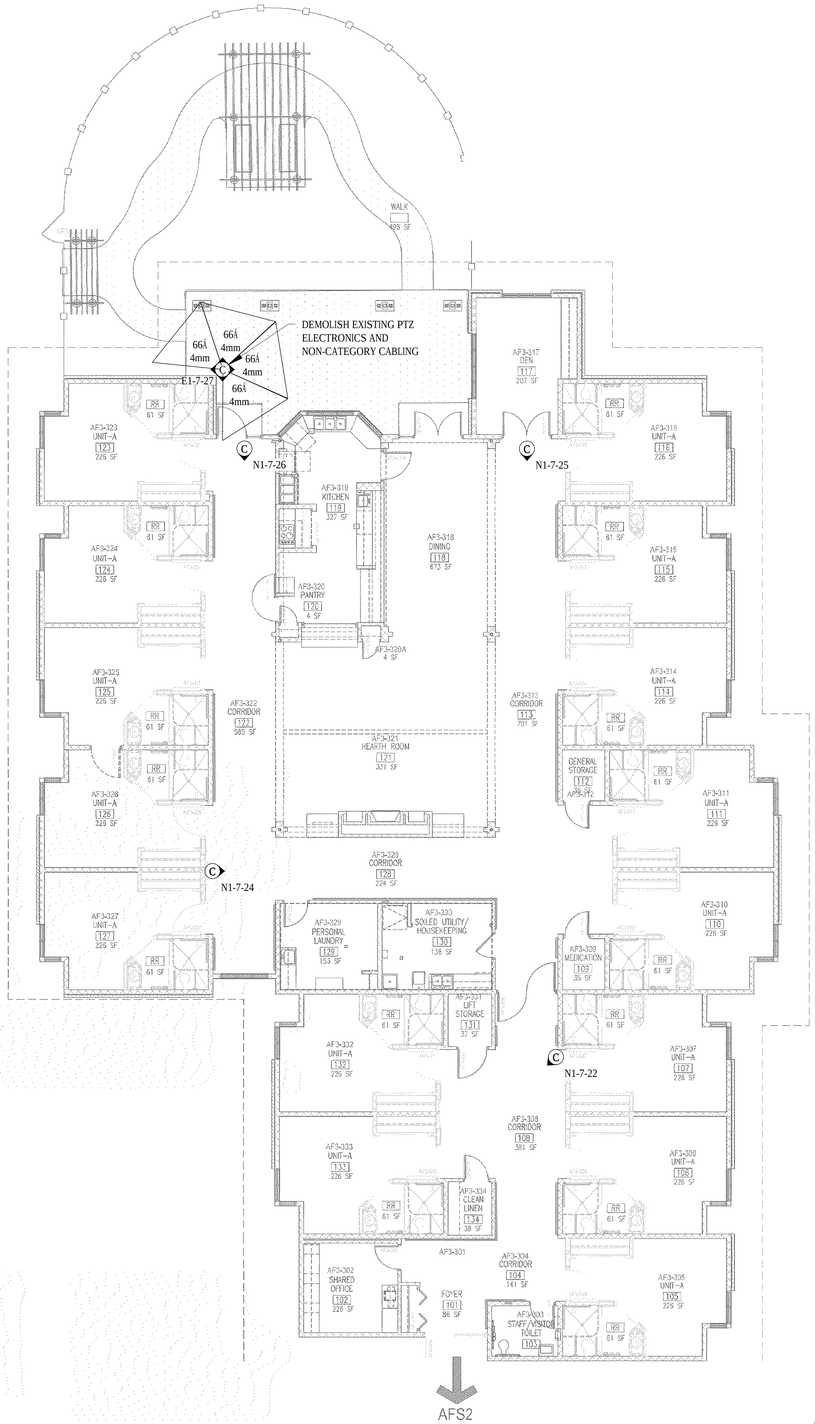


NORTH

1 AMOS FOX - HOUSEHOLD 3 - (AF3)
SCALE: 1/8" - 1'-0"

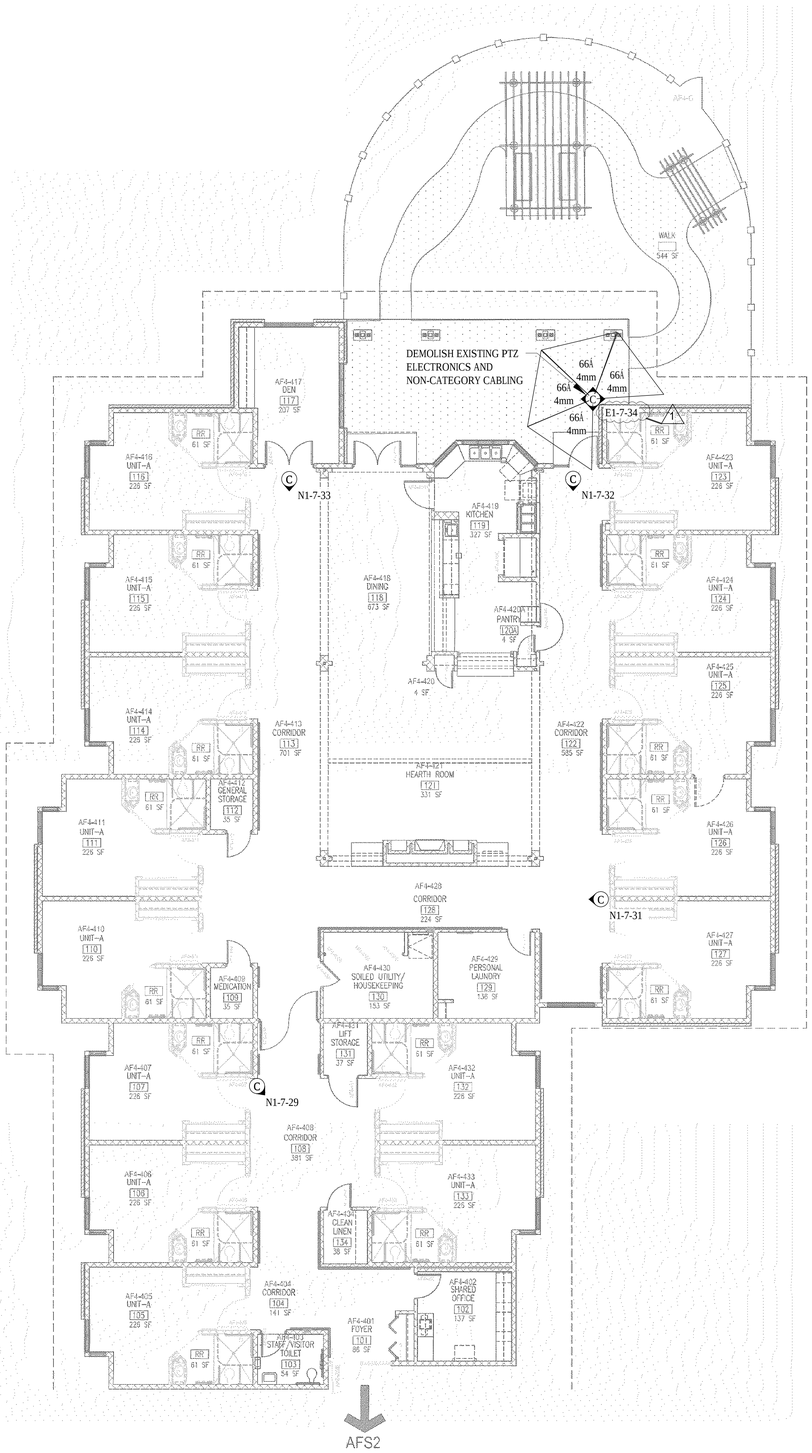


NORTH

2 AMOS FOX - HOUSEHOLD 4 - (AF4)
SCALE: 3/8" - 1'-0"

elert & associates
140 Third Street South
Stillwater, MN 55082
651.430.2772 fax: 651.430.2661
www.elert.com

# IOWA VETERAN'S HOME SECURITY CAMERA UPGRADE

## IOWA VETERAN'S HOME

1301 SUMMIT ST, MARSHALLTOWN, IA 50158

| Revision: | | Date: |
|---|---|---|
| 1 | ADDENDUM 1 | 01/26/2016 |
| | 100% CD | 12/31/2015 |

| | |
|---|---|
| Project No.: | |
| Checked By: | TP |
| Designed By: | TP/BF/JM |
| Drawn By: | MA/JM |
| Scale: | as shown |
| Date: | 12/31/2015 |

AMOS FOX - HOUSEHOLD 3 AND 4 FLOOR PLAN

T202.3

Elert & Associates Copyright-All Rights Reserved

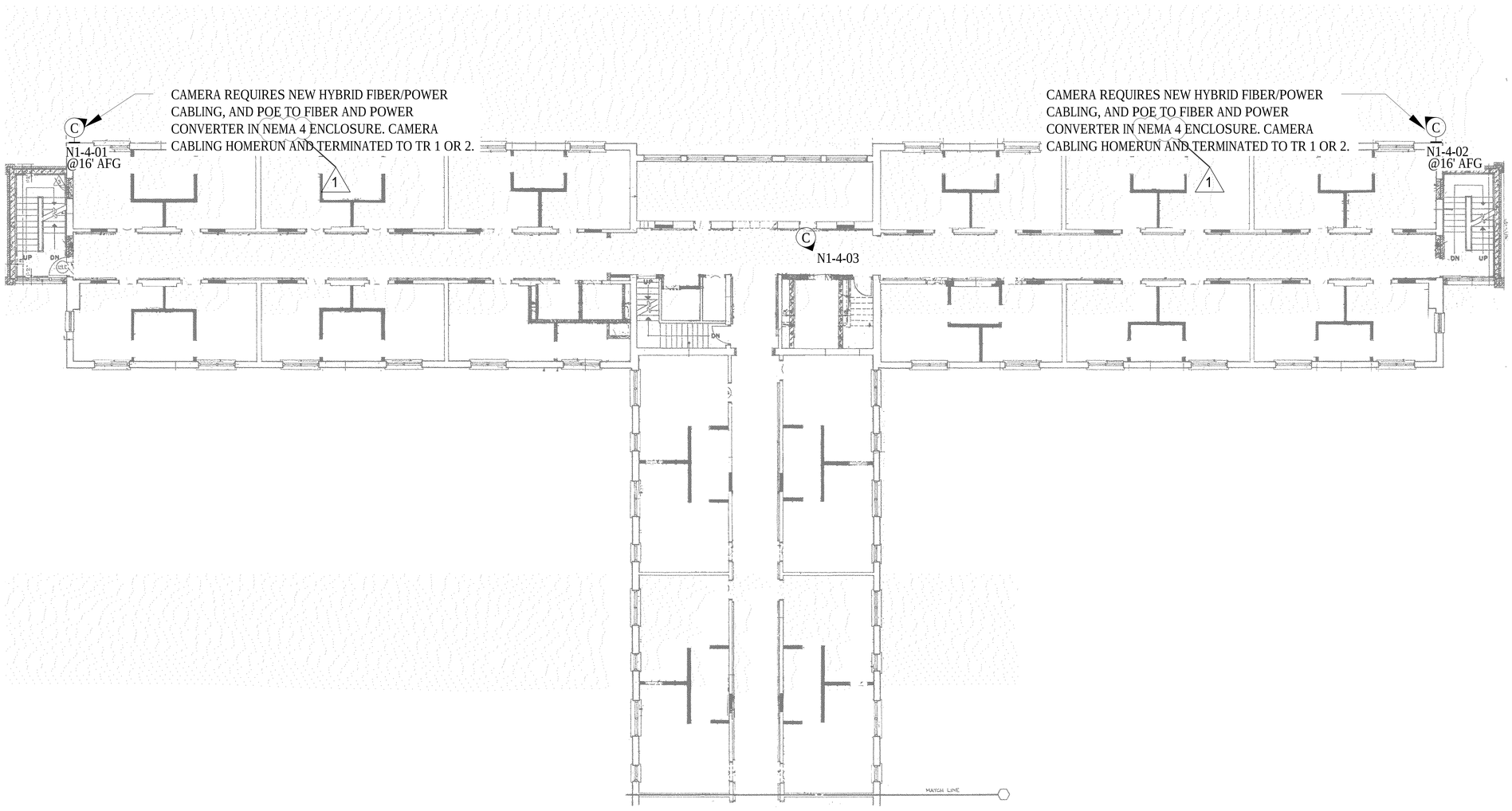


1 HEINZ HALL - MAIN FLOOR PLAN - AREA B
SCALE: 1/8" - 1' -0"

NORTH

elert & associates
140 Third Street South
Stillwater, MN 55082
651.430.2772 fax: 651.430.2661
www.elert.com

# IOWA VETERAN'S HOME SECURITY CAMERA UPGRADE

## IOWA VETERAN'S HOME

1301 SUMMIT ST, MARSHALLTOWN, IA 50158

| Revision: | | Date: |
|---|---|---|
| 1 | ADDENDUM 1 | 01/26/2016 |
| | 100% CD | 12/31/2015 |

| | |
|---|---|
| Project No.: | |
| Checked By: | TP |
| Designed By: | TP/BF/JM |
| Drawn By: | MA/JM |
| Scale: | as shown |
| Date: | 12/31/2015 |

HEINZ HALL - MAIN FLOOR PLAN - AREA B

T203.3

Elert & Associates Copyright-All Rights Reserved

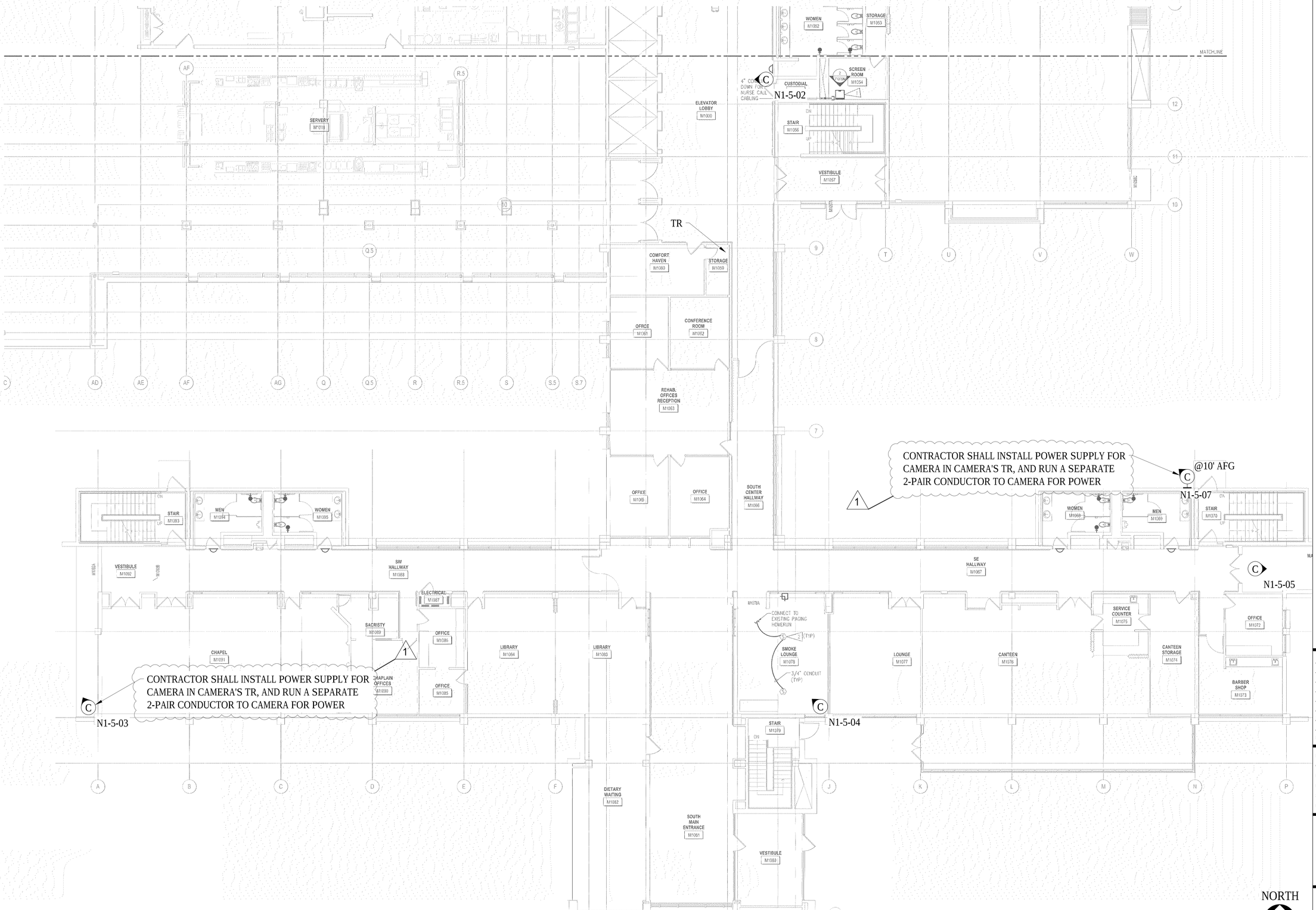


1 MALLOY - FIRST FLOOR PLAN SOUTH
SCALE: 1/8" - 1'-0"

elert & associates
140 Third Street South
Stillwater, MN 55082
651.430.2772 fax: 651.430.2661
www.elert.com

# IOWA VETERAN'S HOME SECURITY CAMERA UPGRADE

## IOWA VETERAN'S HOME

1301 SUMMIT ST, MARSHALLTOWN, IA 50158

| Revision: | | Date: |
|---|---|---|
| 1 | ADDENDUM 1 | 01/26/2016 |
| | 100% CD | 12/31/2015 |

| | |
|---|---|
| Project No.: | |
| Checked By: | TP |
| Designed By: | TP/BF/JM |
| Drawn By: | MA/JM |
| Scale: | as shown |
| Date: | 12/31/2015 |

MALLOY - FIRST FLOOR PLAN SOUTH

T205.3

Elert & Associates Copyright-All Rights Reserved

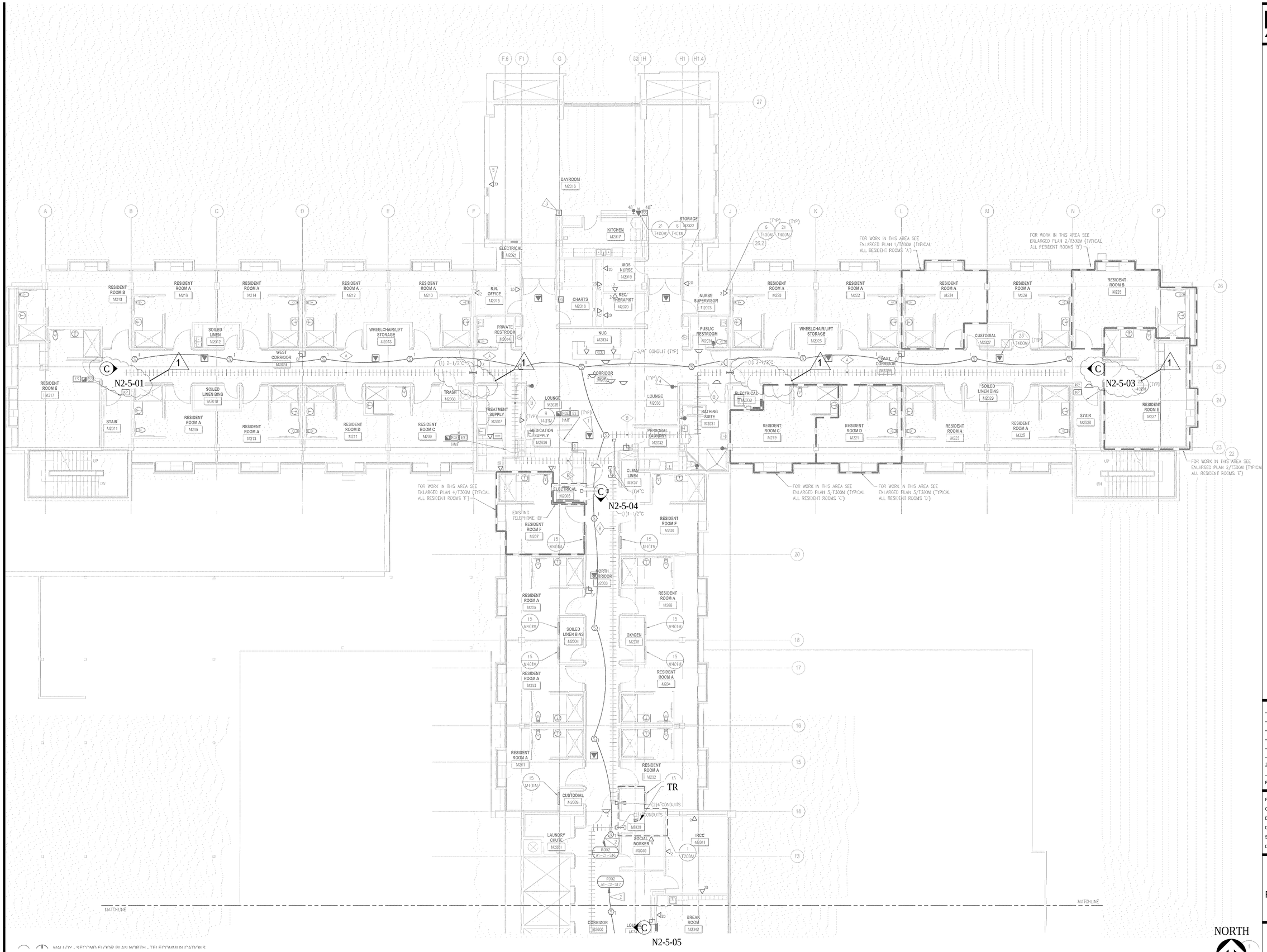


1 MALLOY - SECOND FLOOR PLAN NORTH
SCALE: 1/8" - 1'-0"

elert & associates
140 Third Street South
Stillwater, MN 55082
651.430.2772 fax: 651.430.2661
www.elert.com

# IOWA VETERAN'S HOME SECURITY CAMERA UPGRADE

IOWA VETERAN'S HOME
1301 SUMMIT ST, MARSHALLTOWN, IA 50158

| Revision: | | Date: |
|---|---|---|
| 1 | ADDENDUM 1 | 01/26/2016 |
| | 100% CD | 12/31/2015 |

Project No.:
Checked By: TP
Designed By: TP/BF/JM
Drawn By: MA/JM
Scale: as shown
Date: 12/31/2015

MALLOY - SECOND FLOOR PLAN NORTH

T205.4

Elert & Associates Copyright-All Rights Reserved

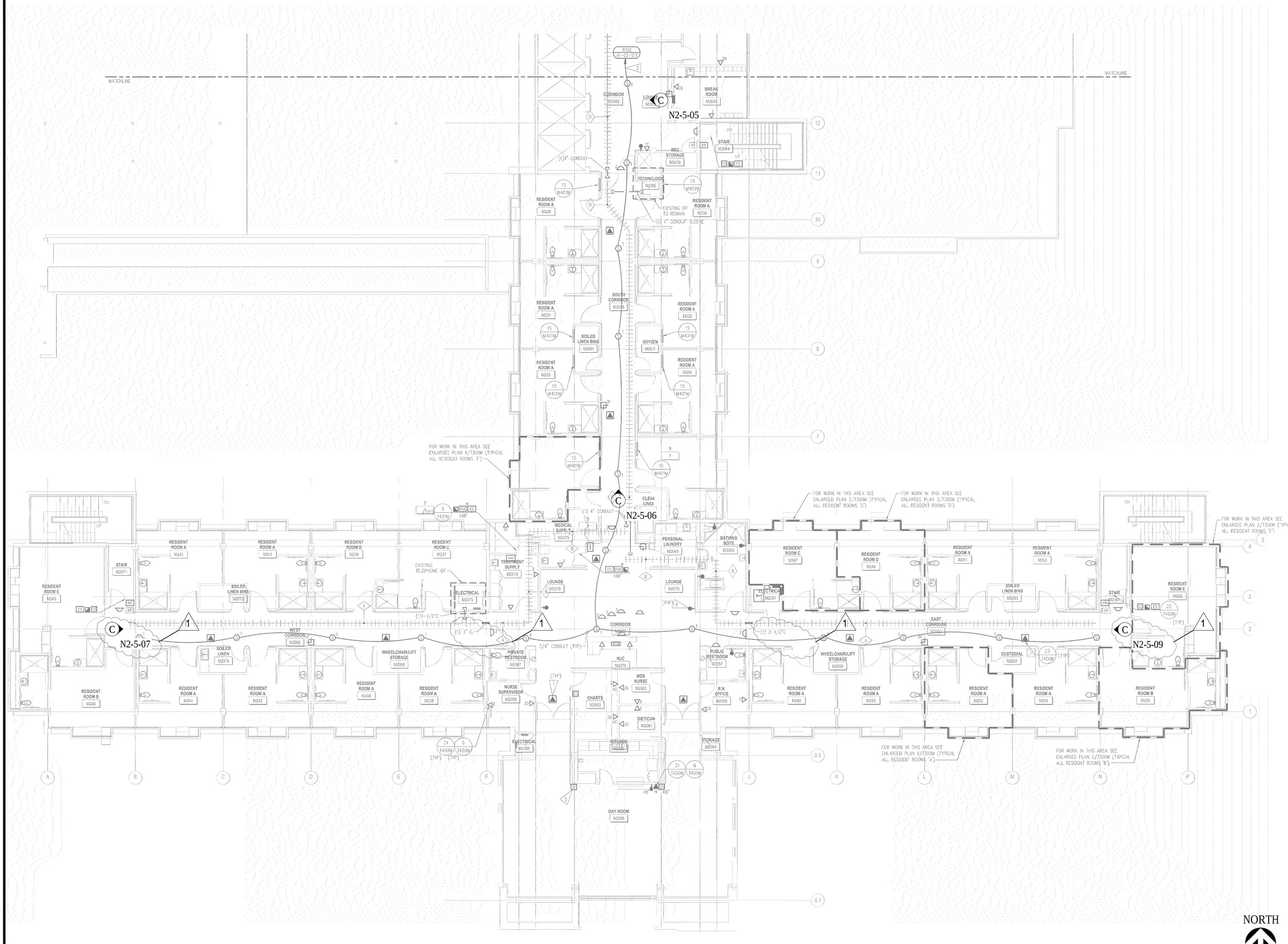


1 MALLOY - SECOND FLOOR PLAN SOUTH
SCALE: 1/8" - 1'-0"

NORTH

elert & associates
140 Third Street South
Stillwater, MN 55082
651.430.2772 fax: 651.430.2661
www.elert.com

# IOWA VETERAN'S HOME SECURITY CAMERA UPGRADE

## IOWA VETERAN'S HOME

1301 SUMMIT ST, MARSHALLTOWN, IA 50158

| Revision: | | Date: |
|---|---|---|
| 1 | ADDENDUM 1 | 01/26/2016 |
| | 100% CD | 12/31/2015 |

| | |
|---|---|
| Project No.: | |
| Checked By: | TP |
| Designed By: | TP/BF/JM |
| Drawn By: | MA/JM |
| Scale: | as shown |
| Date: | 12/31/2015 |

MALLOY - SECOND FLOOR PLAN SOUTH

T205.5

Elert & Associates Copyright-All Rights Reserved

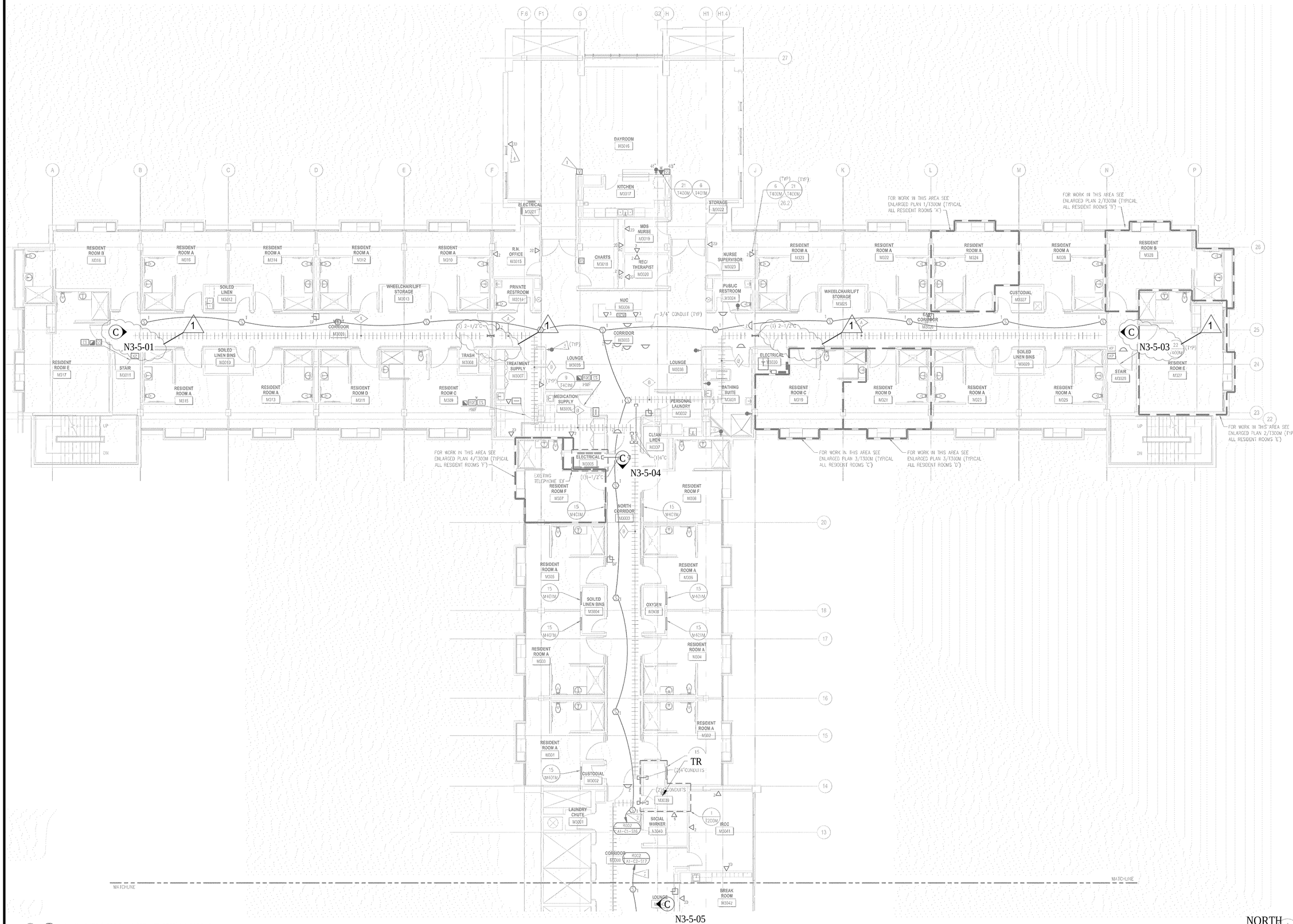


MALLOY - THIRD FLOOR PLAN NORTH - TELECOMMUNICATIONS

1 MALLOY - THIRD FLOOR PLAN NORTH
SCALE: 1/8" - 1'-0"

NORTH

elert & associates
140 Third Street South
Stillwater, MN 55082
651.430.2772 fax: 651.430.2661
www.elert.com

# IOWA VETERAN'S HOME SECURITY CAMERA UPGRADE

## IOWA VETERAN'S HOME

1301 SUMMIT ST, MARSHALLTOWN, IA 50158

| Revision: | Date: |
|---|---|
| 1 ADDENDUM 1 | 01/26/2016 |
| 100% CD | 12/31/2015 |

| | |
|---|---|
| Project No.: | |
| Checked By: | TP |
| Designed By: | TP/BF/JM |
| Drawn By: | MA/JM |
| Scale: | as shown |
| Date: | 12/31/2015 |

MALLOY - THIRD FLOOR PLAN NORTH

T205.6

Elert & Associates Copyright-All Rights Reserved

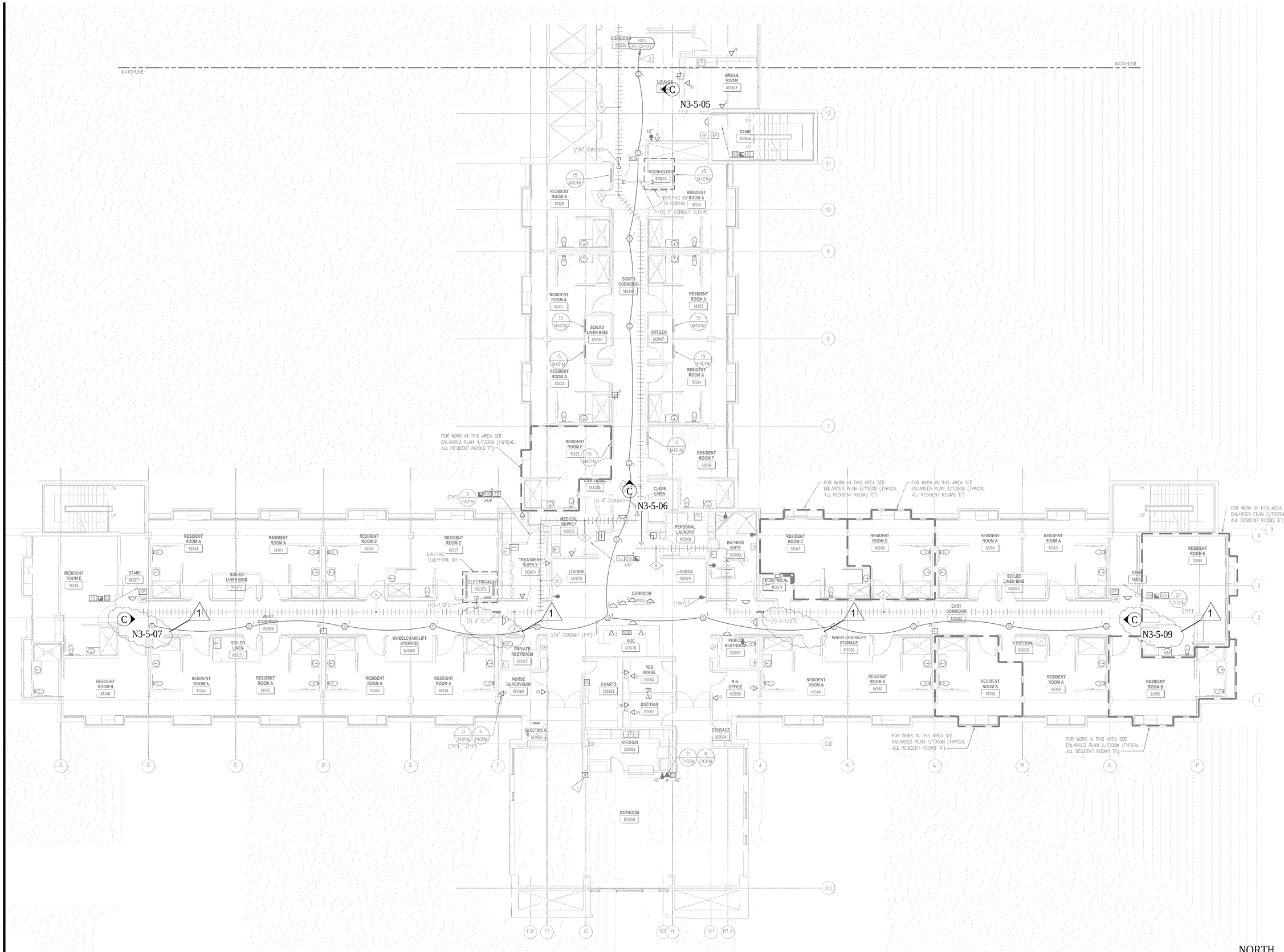


1 MALLOY - THIRD FLOOR PLAN SOUTH
SCALE: 1/8" - 1'-0"

elert & associates
140 Third Street South
Stillwater, MN 55082
651.430.2772 fax: 651.430.2661
www.elert.com

# IOWA VETERAN'S HOME SECURITY CAMERA UPGRADE

## IOWA VETERAN'S HOME

1301 SUMMIT ST, MARSHALLTOWN, IA 50158

| Revision: | | Date: |
|---|---|---|
| 1 | ADDENDUM 1 | 01/26/2016 |
| | 100% CD | 12/31/2015 |

| | |
|---|---|
| Project No.: | |
| Checked By: | TP |
| Designed By: | TP/BF/JM |
| Drawn By: | MA/JM |
| Scale: | as shown |
| Date: | 12/31/2015 |

MALLOY - THIRD FLOOR PLAN SOUTH

T205.7

Elert & Associates Copyright-All Rights Reserved

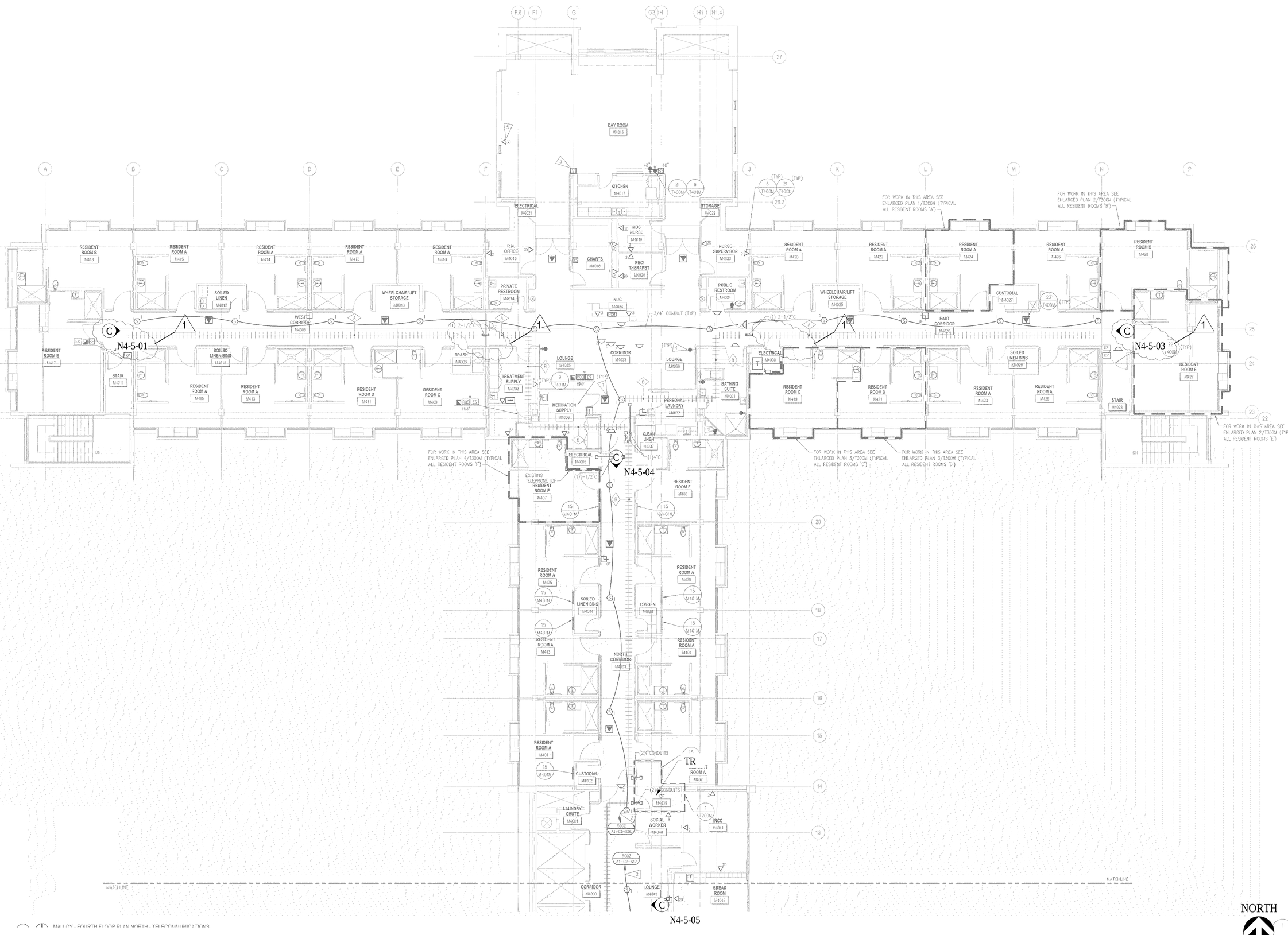


1 MALLOY - FOURTH FLOOR PLAN NORTH - TELECOMMUNICATIONS

1 MALLOY - FOURTH FLOOR PLAN NORTH
SCALE: 1/8" - 1'-0"

NORTH

elert & associates
140 Third Street South
Stillwater, MN 55082
651.430.2772 fax: 651.430.2661
www.elert.com

# IOWA VETERAN'S HOME SECURITY CAMERA UPGRADE

## IOWA VETERAN'S HOME

1301 SUMMIT ST, MARSHALLTOWN, IA 50158

| Revision: | | Date: |
|---|---|---|
| 1 | ADDENDUM 1 | 01/26/2016 |
| | 100% CD | 12/31/2015 |

| | |
|---|---|
| Project No.: | |
| Checked By: | TP |
| Designed By: | TP/BF/JM |
| Drawn By: | MAJM |
| Scale: | as shown |
| Date: | 12/31/2015 |

MALLOY - FOURTH FLOOR PLAN NORTH

T205.8

Elert & Associates Copyright-All Rights Reserved

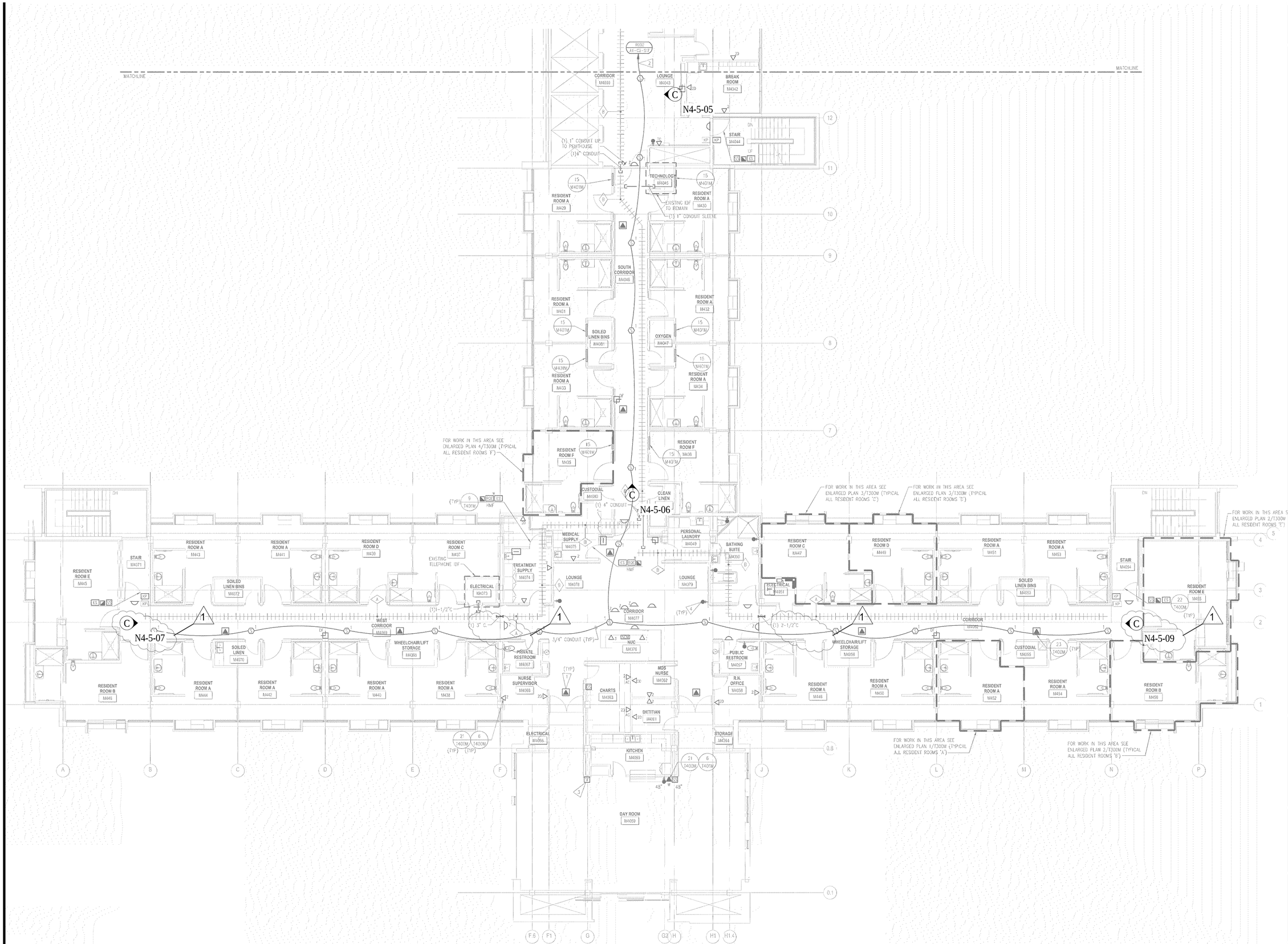


1 MALLOY - FOURTH FLOOR PLAN SOUTH
SCALE: 1/8" - 1'-0"

NORTH

elert & associates
140 Third Street South
Stillwater, MN 55082
651.430.2772 fax: 651.430.2661
www.elert.com

# IOWA VETERAN'S HOME SECURITY CAMERA UPGRADE

## IOWA VETERAN'S HOME

1301 SUMMIT ST, MARSHALLTOWN, IA 50158

| Revision: | | Date: |
|---|---|---|
| 1 | ADDENDUM 1 | 01/26/2016 |
| | 100% CD | 12/31/2015 |

| | |
|---|---|
| Project No.: | |
| Checked By: | TP |
| Designed By: | TP/BF/JM |
| Drawn By: | MA/JM |
| Scale: | as shown |
| Date: | 12/31/2015 |

MALLOY - FOURTH FLOOR PLAN SOUTH

T205.9

Elert & Associates Copyright-All Rights Reserved

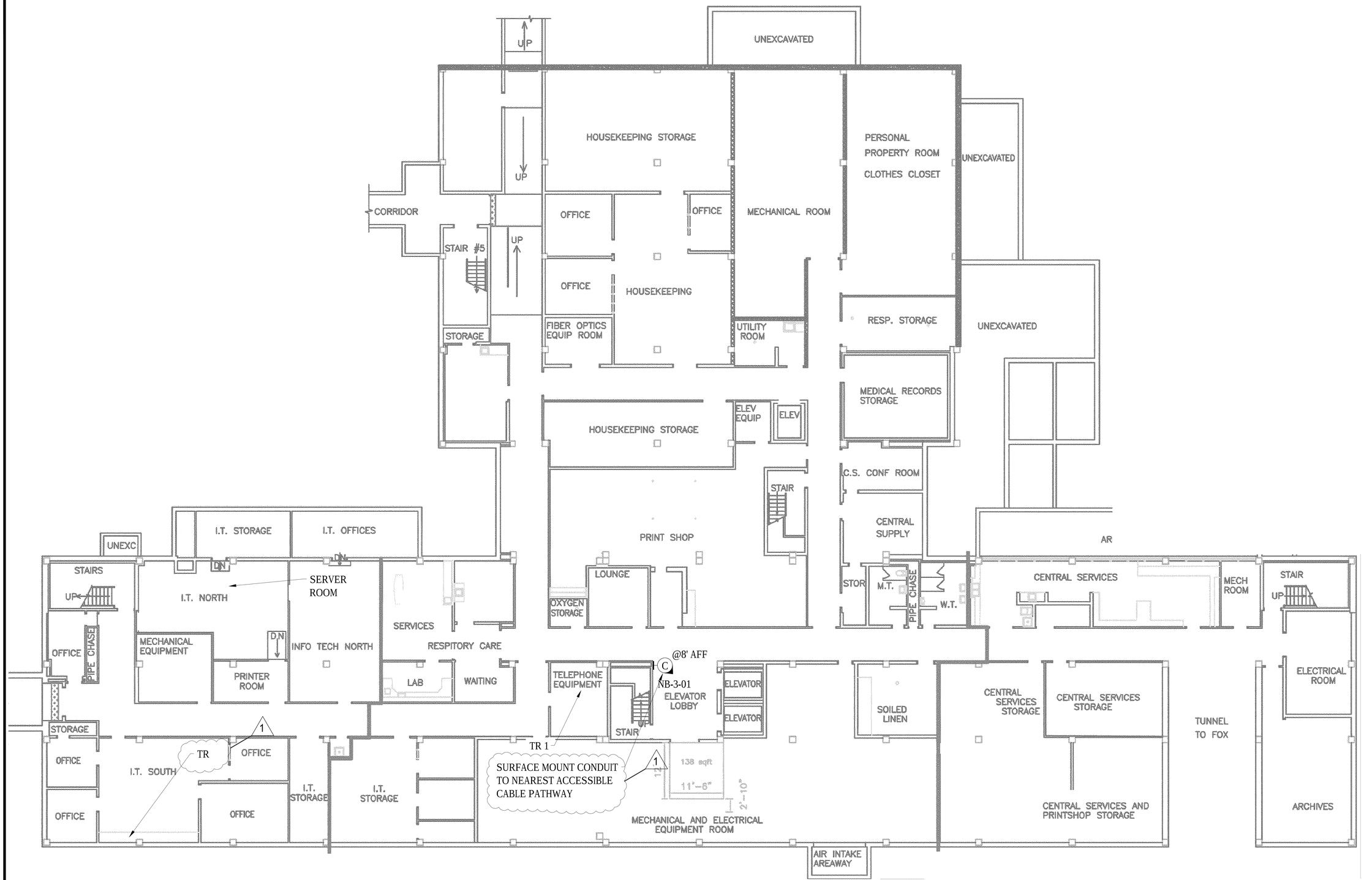


NORTH

1 SHEELER - BASEMENT FLOOR PLAN
SCALE: 1/8" - 1' -0"

elert & associates
140 Third Street South
Stillwater, MN 55082
651.430.2772 fax: 651.430.2661
www.elert.com

# IOWA VETERAN'S HOME SECURITY CAMERA UPGRADE

## IOWA VETERAN'S HOME

1301 SUMMIT ST, MARSHALLTOWN, IA 50158

| Revision: | | Date: |
|---|---|---|
| 1 | ADDENDUM 1 | 01/26/2016 |
| | 100% CD | 12/31/2015 |

| | |
|---|---|
| Project No.: | |
| Checked By: | TP |
| Designed By: | TP/BF/JM |
| Drawn By: | MA/JM |
| Scale: | as shown |
| Date: | 12/31/2015 |

SHEELER - BASEMENT FLOOR PLAN

T206.0

Elert & Associates Copyright-All Rights Reserved

1 SHEELER - FIRST FLOOR PLAN
SCALE: 1/8" - 1' -0"

elert & associates
140 Third Street South
Stillwater, MN 55082
651.430.2772 fax: 651.430.2661
www.elert.com

# IOWA VETERAN'S HOME SECURITY CAMERA UPGRADE

## IOWA VETERAN'S HOME

1301 SUMMIT ST, MARSHALLTOWN, IA 50158

| Revision: | | Date: |
|---|---|---|
| 1 | ADDENDUM 1 | 01/26/2016 |
| | 100% CD | 12/31/2015 |

| | |
|---|---|
| Project No.: | |
| Checked By: | TP |
| Designed By: | TP/BF/JM |
| Drawn By: | MA/JM |
| Scale: | as shown |
| Date: | 12/31/2015 |

SHEELER - FIRST FLOOR PLAN

T206.1

Elert & Associates Copyright-All Rights Reserved

GENERAL NOTES:

1. REFER TO SECURITY SCHEDULE AND SPECIFICATIONS FOR ADDITIONAL REQUIREMENTS.

2. PROVIDE WEATHER PROOF/WATER RESISTANT ENCLOSURE WITH HEATER/BLOWER FOR ALL EXTERIOR CAMERAS.

3. ALL CABLES FROM CAMERAS SHALL BE INSTALLED IN FLEXIBLE AND/OR METALLIC CONDUIT.

4. ALL MOUNTING DETAILS ARE REFERENCE FOR ALL FIXED DOME, 180Å, 360Å, PTZ, AND "BULLET/BOX" CAMERAS.

5. ALL DEVICE LOCATIONS REQUIRE BACK-BOX AND CONCEALED CONDUIT ROUTED WITHIN WALL TO CEILING AREA UNO. CONTINUOUS CONDUITS SECTIONS SHALL BE PROVIDED AT ALL AREAS EXPOSED TO PUBLIC VIEW OR AREAS WITH ROUTINGS ACROSS INACCESSIBLE CEILINGS. J-HOOKS CAN BE PROVIDED ABOVE ACCESSIBLE CEILING AREAS. CONDUIT SLEEVES SHALL BE PROVIDED THRU WALLS.

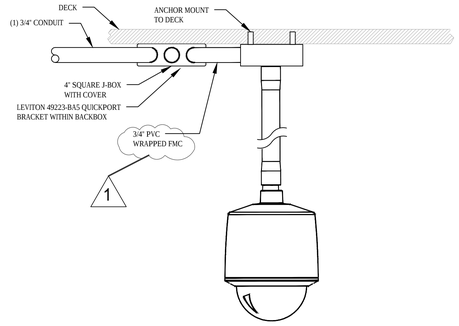


1 CEILING MOUNTED PENDANT CAMERA DETAIL
SCALE: NTS

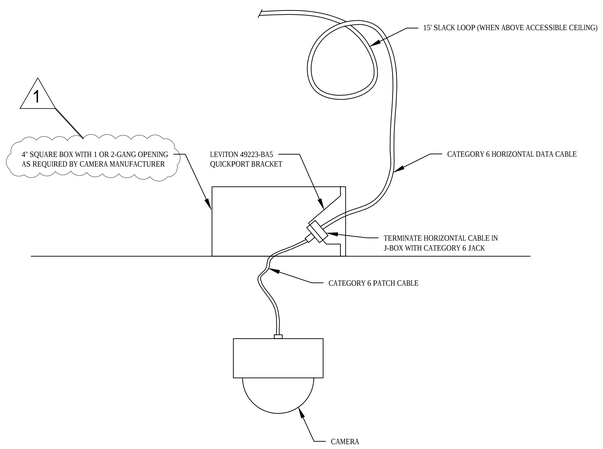


2 TYPICAL CAMERA INSTALLATION SECTION DETAIL
SCALE: NTS

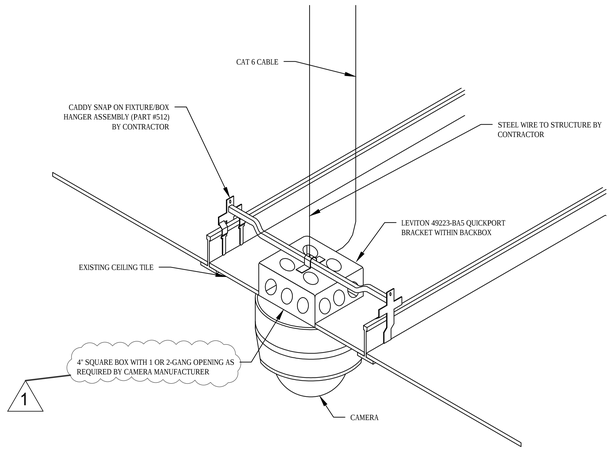


3 TYPICAL TILE BRIDGE SUPPORT DETAIL
SCALE: NTS

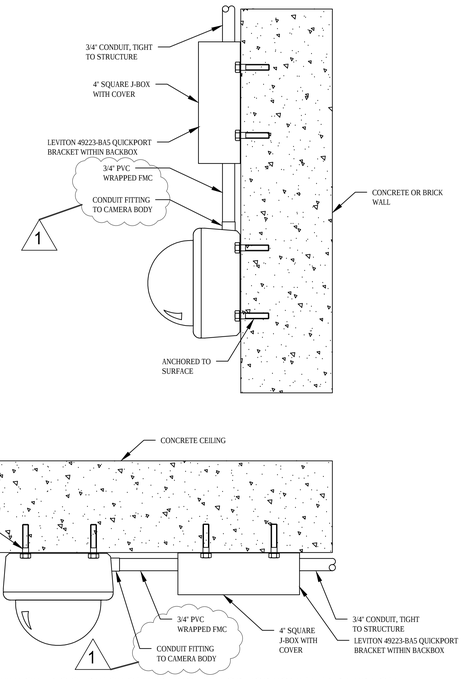


4 TYPICAL HARDLID/CONRETE CEILING SURFACE CAMERA MOUNT FOR HORIZONTAL AND VERTICAL
SCALE: NTS

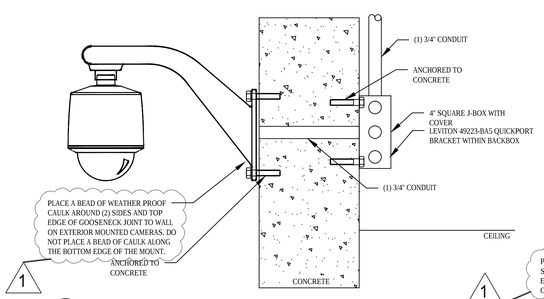


5 TYPICAL CONCRETE WALL FLUSH CAMERA MOUNT
SCALE: NTS

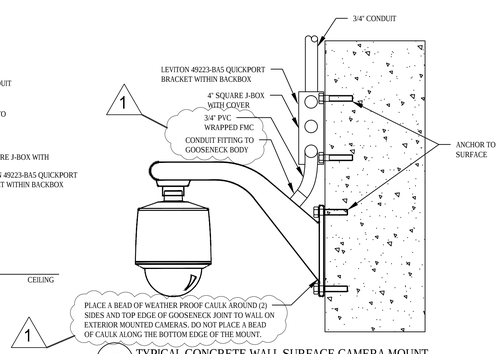


6 TYPICAL CONCRETE WALL SURFACE CAMERA MOUNT
SCALE: NTS

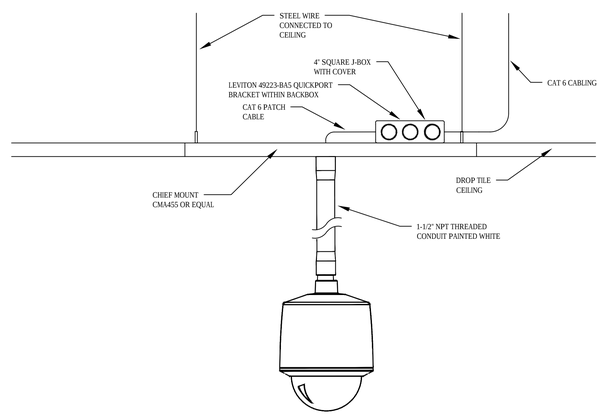


7 DROP-TILE CEILING MOUNTED PENDANT CAMERA DETAIL
SCALE: NTS


elert & associates
140 Third Street South
Stillwater, MN 55082
651.430.2772 fax: 651.430.2661
www.elert.com


# IOWA VETERAN'S HOME SECURITY CAMERA UPGRADE

## IOWA VETERAN'S HOME

1301 SUMMIT ST, MARSHALLTOWN, IA 50158

| Revision: | | Date: |
|---|---|---|
| 1 | ADDENDUM 1 | 01/26/2016 |
| | 100% CD | 12/31/2015 |

| | |
|---|---|
| Project No.: | |
| Checked By: | TP |
| Designed By: | TP/BF/JM |
| Drawn By: | MA/JM |
| Scale: | as shown |
| Date: | 12/31/2015 |

DETAILS

T500

Elert & Associates Copyright-All Rights Reserved

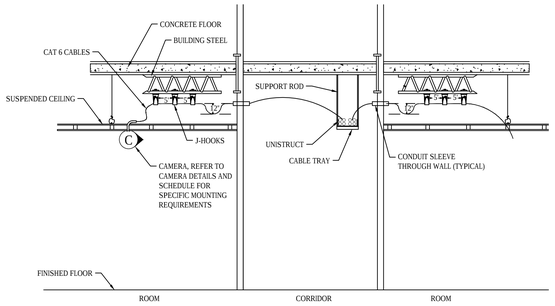


1 DROPPED CEILING MOUNTING DETAIL
SCALE: NS

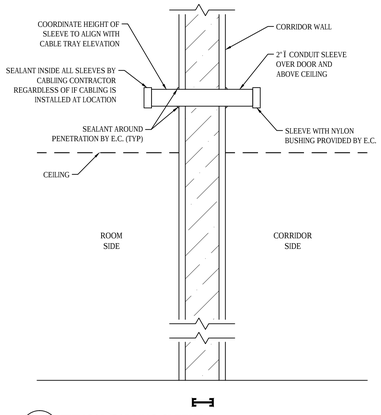


2 TYPICAL CABLING SLEEVE
SCALE: NTS

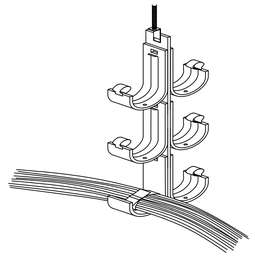

3 TYPICAL J-HOOK DETAIL
SCALE: NTS

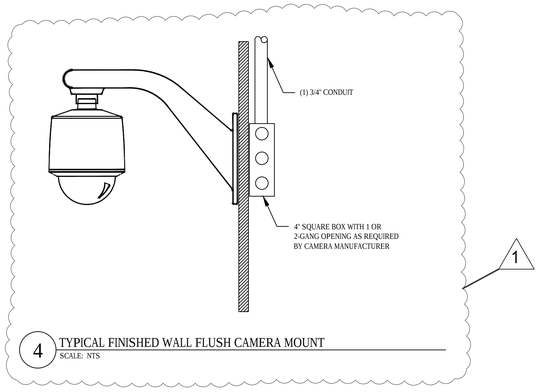


4 TYPICAL FINISHED WALL FLUSH CAMERA MOUNT
SCALE: NTS

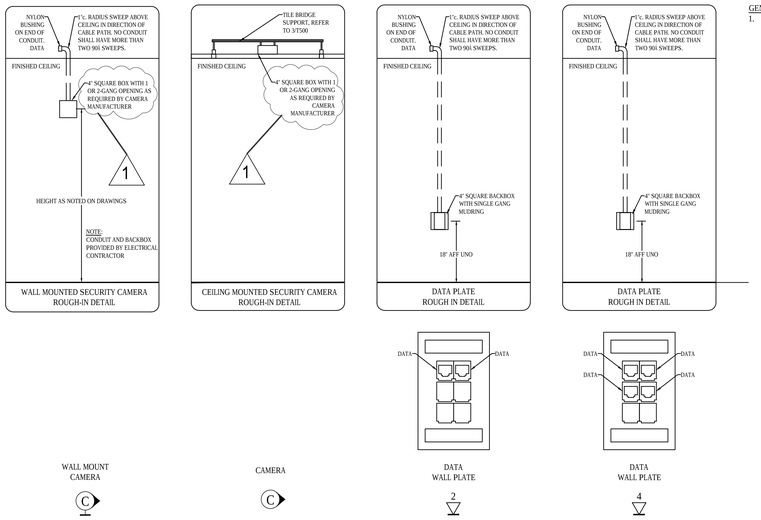


GENERAL NOTE
1. FACE PLATE DETAIL FOR OUTLET CONFIGURATION PURPOSES ONLY. CONTRACTOR TO SELECT TYPE OF FACE PLATE TO MATCH CONNECTIVITY HARDWARE, FLOOR BOX AND/OR MODULAR FURNITURE OPENING.

5 ROUGH-IN DETAILS
SCALE: NS

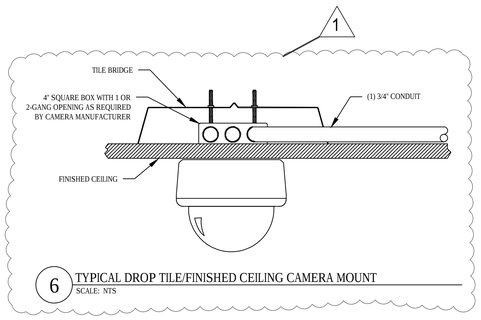


6 TYPICAL DROP TILE/FINISHED CEILING CAMERA MOUNT
SCALE: NTS

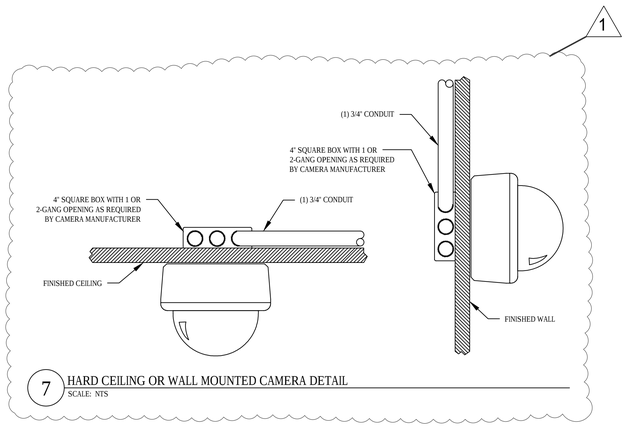


7 HARD CEILING OR WALL MOUNTED CAMERA DETAIL
SCALE: NTS

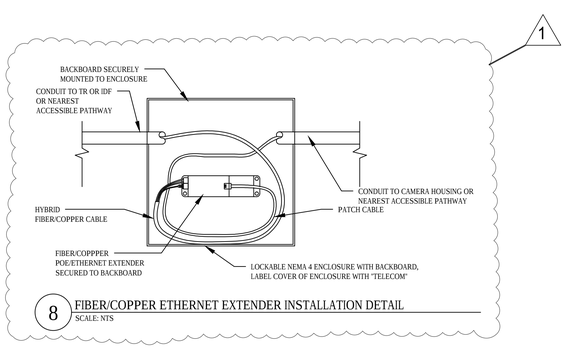


8 FIBER/COPPER ETHERNET EXTENDER INSTALLATION DETAIL
SCALE: NTS

elert & associates
140 Third Street South
Stillwater, MN 55082
651.430.2772 fax: 651.430.2661
www.elert.com

# IOWA VETERAN'S HOME SECURITY CAMERA UPGRADE

## IOWA VETERAN'S HOME

1301 SUMMIT ST, MARSHALLTOWN, IA 50158

| Revision: | | Date: |
|---|---|---|
| 1 | ADDENDUM 1 | 01/26/2016 |
| | 100% CD | 12/31/2015 |

| | |
|---|---|
| Project No.: | |
| Checked By: | TP |
| Designed By: | TP/BF/JM |
| Drawn By: | MA/JM |
| Scale: | as shown |
| Date: | 12/31/2015 |

DETAILS

T501

Elert & Associates Copyright-All Rights Reserved

| Camera # | Data Room | Actual Room # | Camera Type | Mounting Structure | Location | View | Notes |
|---|---|---|---|---|---|---|---|
| NB-1-01 | D0004 | D003 | C1IR | DROP TILE | ELEVATOR LOBBY | ELEVATOR LOBBY | |
| N1-1-01 | D1036 | | C1 | DROP TILE | EAST HALLWAY NEAR ELEVATOR LOBBY | ELEVATOR LOBBY | |
| N1-1-02 | D1036 | | C1IR | DROP TILE | SMOKING ROOM | SMOKING ROOM | |
| N2-1-01 | D2028 | | C2 | DROP TILE | WEST CORRIDOR | WEST CORRIDOR | |
| N2-1-02 | D2028 | | C2IR | WALL | PORCH OUTSIDE VESTIBULE D2022 | UNDERNEATH TRELLIS | GOOSENECK, FIELD COORDINATE FINAL MOUNTING HEIGHT FOR VIEW UNDERNEATH TRELLIS, CONTRACTOR SHALL INSTALL POWER SUPPLY FOR CAMERA IN CAMERA'S TR, AND RUN A SEPARATE 2-PAIR CONDUCTOR TO CAMERA FOR POWER |
| N2-1-03 | D2028 | | C1 | DROP TILE | ELEVATOR LOBBY | ELEVATOR LOBBY | |
| N2-1-04 | D2028 | | C2 | DROP TILE | SOUTH CORRIDOR | SOUTH CORRIDOR | |
| N2-1-05 | D2028 | | C2 | DROP TILE | EAST CORRIDOR | EAST CORRIDOR | |
| N3-1-01 | D3027 | | C2 | DROP TILE | WEST CORRIDOR | WEST CORRIDOR | |
| N3-1-02 | D3027 | | C1 | DROP TILE | ELEVATOR LOBBY | ELEVATOR LOBBY | |
| N3-1-03 | D3027 | | C2 | DROP TILE | SOUTH CORRIDOR | SOUTH CORRIDOR | |
| N3-1-04 | D3027 | | C2 | DROP TILE | EAST CORRIDOR | EAST CORRIDOR | |
| N4-1-01 | D4027 | | C2 | DROP TILE | WEST CORRIDOR | WEST CORRIDOR | |
| N4-1-02 | D4027 | | C1 | DROP TILE | ELEVATOR LOBBY | ELEVATOR LOBBY | |
| N4-1-03 | D4027 | | C2 | DROP TILE | SOUTH CORRIDOR | SOUTH CORRIDOR | |
| N4-1-04 | D4027 | | C2 | DROP TILE | EAST CORRIDOR | EAST CORRIDOR | |
| N1-2-01 | TR 2 | L016 | C1IR | DROP TILE | CORRIDOR | ELEVATOR | |
| N2-2-01 | TR 1 | L010.1 | C2 | DROP TILE | SOUTH CORRIDOR | SOUTH CORRIDOR | ADD ALTERNATE 1 |
| N2-2-02 | TR 2 | L016 | C1IR | DROP TILE | EAST CORRIDOR | ELEVATOR | |
| N2-2-03 | TR 2 | L016 | C2 | DROP TILE | NORTH CORRIDOR | NORTH CORRIDOR | ADD ALTERNATE 1 |
| N3-2-01 | TR 1 | L010.1 | C2 | DROP TILE | SOUTH CORRIDOR | SOUTH CORRIDOR | ADD ALTERNATE 1 |
| N3-2-02 | TR 2 | L016 | C1IR | DROP TILE | EAST CORRIDOR | ELEVATOR | |
| N3-2-03 | TR 2 | L016 | C2 | DROP TILE | NORTH CORRIDOR | NORTH CORRIDOR | ADD ALTERNATE 1 |
| NB-3-01 | TR 1 | S004 | C1IR | WALL | ELEVATOR LOBBY | ELEVATOR LOBBY | MOUNTED UNDERNEATH DUCTWORK, SURFACE MOUNT CONDUIT TO NEAREST ACCESSIBLE CABLE PATHWAY |
| D1-3-01 | | | | HARD LID | DRIVE UP AREA | | PATCH AND PAINT TO MATCH EXISTING CEILING |
| D1-3-02 | | | | HARD LID | DRIVE UP AREA | | PATCH AND PAINT TO MATCH EXISTING CEILING |
| N1-3-03 | TR 2 | S123 | C3 | HARD LID | DRIVE UP AREA | BIKE RACKS, DRIVE-UP, DOORS, BENCHES | (4) 2.8MM |
| N1-3-04 | TR 2 | S123 | C1IR | DROP TILE | ELEVATOR LOBBY | ELEVATOR LOBBY | |
| E1-3-05 | TR 2 | S123 | C1IR | DROP TILE | LOBBY | LOBBY | |
| N1-3-06 | TR 2 | S123 | C2IR | WALL | SMOKING AREA | SMOKING AREA | GOOSENECK, CONTRACTOR SHALL INSTALL POWER SUPPLY FOR CAMERA IN CAMERA'S TR, AND RUN A SEPARATE 2-PAIR CONDUCTOR TO CAMERA FOR POWER |
| N2-3-01 | TR 2 | S123 | C1 | DROP TILE | ELEVATOR LOBBY | ELEVATOR LOBBY | |
| N3-3-01 | TR 2 | S123 | C1 | DROP TILE | ELEVATOR LOBBY | ELEVATOR LOBBY | |
| NB-4-01 | TR 1 | H055 | C1IR | DROP TILE | ELEVATOR LOBBY | ELEVATOR | |
| NB-4-02 | TR 1 | H055 | C1IR | DROP TILE | ELEVATOR LOBBY | ELEVATOR | |
| N1-4-01 | TR 1 | H055 | C2 | WALL | NORTHWEST CORNER BUILDING | PARKING | GOOSENECK, CAMERA REQUIRES NEW HYBRID FIBER/POWER CABLING, AND POE TO FIBER AND POWER CONVERTER IN NEMA 4 ENCLOSURE. |
| N1-4-02 | TR 1 | H055 | C2 | WALL | NORTHEAST CORNER BUILDING | PARKING | GOOSENECK, CAMERA REQUIRES NEW HYBRID FIBER/POWER CABLING, AND POE TO FIBER AND POWER CONVERTER IN NEMA 4 ENCLOSURE. |
| N1-4-03 | TR 1 | H055 | C1IR | DROP TILE | ELEVATOR LOBBY | ELEVATOR | |
| N1-4-04 | TR 1 | H055 | C3 | WALL | SOUTHEAST CORNER BUILDING | PARKING | GOOSENECK, CORNER MOUNT, (2) 2.8MM, (1) 8MM, (1) 12MM |
| E1-4-05 | TR 1 | H055 | C3 | WALL | SOUTHWEST CORNER BUILDING | SOUTH SIDE OF BUILDING | GOOSENECK, CORNER MOUNT, (4) 4MM, DEMOLISH EXISTING PTZ ELECTRONICS AND NON-CATEGORY CABLING. |
| N1-4-06 | TR 1 | H055 | C1IR | DROP TILE | ELEVATOR LOBBY | ELEVATOR | |
| N2-4-01 | TR 1 | H055 | C1IR | DROP TILE | ELEVATOR LOBBY | ELEVATOR | |
| N2-4-02 | TR 1 | H055 | C1IR | DROP TILE | ELEVATOR LOBBY | ELEVATOR | |
| NB-5-01 | M0042 | M020A | C2IR | DROP TILE | ELEVATOR LOBBY | ELEVATOR LOBBY | |
| N1-5-01 | M0042 | M020A | C2IR | DROP TILE | DACK/MALLOY RAMP | DACK/MALLOY RAMP | |
| N1-5-02 | M1059 | M162A | C2IR | DROP TILE | ELEVATOR LOBBY | ELEVATOR LOBBY | |
| N1-5-03 | M1059 | M162A | C1IR | HARD LID | SOUTHWEST OF BUILDING | ENTRY VESTIBULE, BIKE RACKS | CONTRACTOR SHALL INSTALL POWER SUPPLY FOR CAMERA IN CAMERA'S TR, AND RUN A SEPARATE 2-PAIR CONDUCTOR TO CAMERA FOR POWER |
| N1-5-04 | M1059 | M162A | C1IR | DROP TILE | SMOKING ROOM | SMOKING ROOM | |
| N1-5-05 | M1059 | M162A | C2IR | DROP TILE | MALLOY/LOFTUS RAMP | MALLOY/LOFTUS RAMP | |
| N1-5-06 | M0042 | M020A | C2IR | DROP TILE | DACK/MALLOY RAMP | DACK/MALLOY RAMP | |
| N1-5-07 | M1059 | M162A | C2IR | WALL | SMOKING AREA | SMOKING AREA | GOOSENECK, CONTRACTOR SHALL INSTALL POWER SUPPLY FOR CAMERA IN CAMERA'S TR, AND RUN A SEPARATE 2-PAIR CONDUCTOR TO CAMERA FOR POWER |
| N2-5-01 | M2039 | | C2 | DROP TILE | NORTHWEST CORRIDOR | NORTHWEST CORRIDOR | |
| N2-5-03 | M2039 | | C2 | DROP TILE | NORTHEAST CORRIDOR | NORTHEAST CORRIDOR | |
| N2-5-04 | M2039 | | C2 | DROP TILE | CENTRAL CORRIDOR | CENTRAL CORRIDOR | |
| N2-5-05 | M2039 | | C2IR | DROP TILE | ELEVATOR LOBBY | ELEVATOR LOBBY | |
| N2-5-06 | M2039 | | C2 | DROP TILE | CENTRAL CORRIDOR | CENTRAL CORRIDOR | |
| N2-5-07 | M2039 | | C2 | DROP TILE | SOUTHWEST CORRIDOR | SOUTHWEST CORRIDOR | |
| N2-5-09 | M2039 | | C2 | DROP TILE | SOUTHEAST CORRIDOR | SOUTHEAST CORRIDOR | |
| N3-5-01 | M3039 | | C2 | DROP TILE | NORTHWEST CORRIDOR | NORTHWEST CORRIDOR | |
| N3-5-03 | M3039 | | C2 | DROP TILE | NORTHEAST CORRIDOR | NORTHEAST CORRIDOR | |
| N3-5-04 | M3039 | | C2 | DROP TILE | CENTRAL CORRIDOR | CENTRAL CORRIDOR | |
| N3-5-05 | M3039 | | C2IR | DROP TILE | ELEVATOR LOBBY | ELEVATOR LOBBY | |
| N3-5-06 | M3039 | | C2 | DROP TILE | CENTRAL CORRIDOR | CENTRAL CORRIDOR | |
| N3-5-07 | M3039 | | C2 | DROP TILE | SOUTHWEST CORRIDOR | SOUTHWEST CORRIDOR | |
| N3-5-09 | M3039 | | C2 | DROP TILE | SOUTHEAST CORRIDOR | SOUTHEAST CORRIDOR | |
| N4-5-01 | M4039 | | C2 | DROP TILE | NORTHWEST CORRIDOR | NORTHWEST CORRIDOR | |
| N4-5-03 | M4039 | | C2 | DROP TILE | NORTHEAST CORRIDOR | NORTHEAST CORRIDOR | |
| N4-5-04 | M4039 | | C2 | DROP TILE | CENTRAL CORRIDOR | CENTRAL CORRIDOR | |
| N4-5-05 | M4039 | | C2IR | DROP TILE | ELEVATOR LOBBY | ELEVATOR LOBBY | |
| N4-5-06 | M4039 | | C2 | DROP TILE | CENTRAL CORRIDOR | CENTRAL CORRIDOR | |
| N4-5-07 | M4039 | | C2 | DROP TILE | SOUTHWEST CORRIDOR | SOUTHWEST CORRIDOR | |
| N4-5-09 | M4039 | | C2 | DROP TILE | SOUTHEAST CORRIDOR | SOUTHEAST CORRIDOR | |
| NB-6-01 | NC1-129 | | C1IR | DROP TILE | CORRIDOR NB1-006 | ELEVATOR | |
| N1-6-01 | NS1-104 | | C1 | DROP TILE | HOUSEHOLD 1 CORRIDOR 104 | HOUSEHOLD 1 FOYER 101 | |
| N1-6-02 | NS1-104 | | C1 | DROP TILE | HOUSEHOLD 1 CORRIDOR 108 | HOUSEHOLD 1 CORRIDOR 108 | |
| N1-6-03 | NS1-104 | | C2 | DROP TILE | HOUSEHOLD 1 CORRIDOR 113 | HOUSEHOLD 1 HEARTHROOM 121 | |
| N1-6-04 | NS1-104 | | C2 | DROP TILE | HOUSEHOLD 1 CORRIDOR 128 | HOUSEHOLD 1 CORRIDOR 128 | |
| N1-6-05 | NS1-104 | | C2 | DROP TILE | HOUSEHOLD 1 CORRIDOR 122 | HOUSEHOLD 1 CORRIDOR 122 | |
| N1-6-06 | NS1-104 | | C2 | DROP TILE | HOUSEHOLD 1 CORRIDOR 113 | HOUSEHOLD 1 CORRIDOR 113 | |
| E1-6-07 | EXISTING | | C3 | WALL | HOUSEHOLD 1 PATIO | HOUSEHOLD 1 PATIO AND GATE | GOOSENECK, CORNER MOUNT, (4) 4MM, DEMOLISH EXISTING PTZ ELECTRONICS AND NON-CATEGORY CABLING |
| N1-6-08 | NS1-104 | | C1 | DROP TILE | HOUSEHOLD 2 CORRIDOR 104 | HOUSEHOLD 2 FOYER 101 | |
| N1-6-09 | NS1-104 | | C1 | DROP TILE | HOUSEHOLD 2 CORRIDOR 108 | HOUSEHOLD 2 CORRIDOR 108 | |
| N1-6-10 | NS1-104 | | C2 | DROP TILE | HOUSEHOLD 2 CORRIDOR 113 | HOUSEHOLD 2 HEARTHROOM 121 | |
| N1-6-11 | NS1-104 | | C2 | DROP TILE | HOUSEHOLD 2 CORRIDOR 128 | HOUSEHOLD 2 CORRIDOR 128 | |
| N1-6-12 | NS1-104 | | C2 | DROP TILE | HOUSEHOLD 2 CORRIDOR 122 | HOUSEHOLD 2 CORRIDOR 122 | |
| N1-6-13 | NS1-104 | | C2 | DROP TILE | HOUSEHOLD 2 CORRIDOR 113 | HOUSEHOLD 2 CORRIDOR 113 | |
| E1-6-14 | EXISTING | | C3 | WALL | HOUSEHOLD 2 PATIO | HOUSEHOLD 2 PATIO AND GATE | GOOSENECK, CORNER MOUNT, (4) 4MM, DEMOLISH EXISTING PTZ ELECTRONICS AND NON-CATEGORY CABLING |
| N1-6-15 | NS1-104 | | C1 | DROP TILE | HOUSEHOLD 3 CORRIDOR 104 | HOUSEHOLD 3 FOYER 101 | |
| N1-6-16 | NS1-104 | | C1 | DROP TILE | HOUSEHOLD 3 CORRIDOR 108 | HOUSEHOLD 3 CORRIDOR 108 | |
| N1-6-17 | NS1-104 | | C2 | DROP TILE | HOUSEHOLD 3 CORRIDOR 113 | HOUSEHOLD 3 HEARTHROOM 121 | |
| N1-6-18 | NS1-104 | | C2 | DROP TILE | HOUSEHOLD 3 CORRIDOR 128 | HOUSEHOLD 3 CORRIDOR 128 | |
| N1-6-19 | NS1-104 | | C2 | DROP TILE | HOUSEHOLD 3 CORRIDOR 113 | HOUSEHOLD 3 CORRIDOR 113 | |
| N1-6-20 | NS1-104 | | C2 | DROP TILE | HOUSEHOLD 3 CORRIDOR 122 | HOUSEHOLD 3 CORRIDOR 122 | |
| E1-6-21 | EXISTING | | C3 | WALL | HOUSEHOLD 3 PATIO | HOUSEHOLD 3 PATIO AND GATE | GOOSENECK, CORNER MOUNT, (4) 4MM, DEMOLISH EXISTING PTZ ELECTRONICS AND NON-CATEGORY CABLING |
| N1-6-22 | NS1-104 | | C2IR | HARD LID | CORRIDOR NS1-111 | CORRIDOR NS1-111, VESTIBULE | |
| N1-6-23 | NS1-104 | | C1IR | DROP TILE | CORRIDOR NS1-101 | CORRIDOR NS1-101 | |
| N1-6-24 | NS3-107 | | C1 | DROP TILE | HOUSEHOLD 4 CORRIDOR 104 | HOUSEHOLD 4 FOYER 101 | |
| N1-6-25 | NS3-107 | | C1 | DROP TILE | HOUSEHOLD 4 CORRIDOR 108 | HOUSEHOLD 4 CORRIDOR 108 | |
| N1-6-26 | NS3-107 | | C2 | DROP TILE | HOUSEHOLD 4 CORRIDOR 113 | HOUSEHOLD 4 HEARTHROOM 121 | |
| N1-6-27 | NS3-107 | | C2 | DROP TILE | HOUSEHOLD 4 CORRIDOR 128 | HOUSEHOLD 4 CORRIDOR 128 | |
| N1-6-28 | NS3-107 | | C2 | DROP TILE | HOUSEHOLD 4 CORRIDOR 122 | HOUSEHOLD 4 CORRIDOR 122 | |
| N1-6-29 | NS3-107 | | C2 | DROP TILE | HOUSEHOLD 4 CORRIDOR 113 | HOUSEHOLD 4 CORRIDOR 113 | |
| E1-6-30 | EXISTING | | C3 | WALL | HOUSEHOLD 4 PATIO | HOUSEHOLD 4 PATIO AND GATE | GOOSENECK, CORNER MOUNT, (4) 4MM, DEMOLISH EXISTING PTZ ELECTRONICS AND NON-CATEGORY CABLING |
| N1-6-31 | NS3-107 | | C1 | DROP TILE | HOUSEHOLD 5 CORRIDOR 104 | HOUSEHOLD 5 FOYER 101 | |
| N1-6-32 | NS3-107 | | C1 | DROP TILE | HOUSEHOLD 5 CORRIDOR 108 | HOUSEHOLD 5 CORRIDOR 108 | |
| N1-6-33 | NS3-107 | | C2 | DROP TILE | HOUSEHOLD 5 CORRIDOR 113 | HOUSEHOLD 5 HEARTHROOM 121 | |
| N1-6-34 | NS3-107 | | C2 | DROP TILE | HOUSEHOLD 5 CORRIDOR 128 | HOUSEHOLD 5 CORRIDOR 128 | |
| N1-6-35 | NS3-107 | | C2 | DROP TILE | HOUSEHOLD 5 CORRIDOR 113 | HOUSEHOLD 5 CORRIDOR 113 | |
| N1-6-36 | NS3-107 | | C2 | DROP TILE | HOUSEHOLD 5 CORRIDOR 122 | HOUSEHOLD 5 CORRIDOR 122 | |
| E1-6-37 | EXISTING | | C3 | WALL | HOUSEHOLD 5 PATIO | HOUSEHOLD 5 PATIO AND GATE | GOOSENECK, CORNER MOUNT, (4) 4MM, DEMOLISH EXISTING PTZ ELECTRONICS AND NON-CATEGORY CABLING |
| N1-6-38 | NS3-107 | | C1IR | DROP TILE | CORRIDOR NS3-101 | CORRIDOR NS3-101, EXTERIOR DOOR | |
| N1-6-39 | NS3-107 | | C2IR | DROP TILE | CORRIDOR NS3-105 | CORRIDOR NS3-105 | |
| N1-6-40 | NS2-104 | | C1 | DROP TILE | HOUSEHOLD 6 CORRIDOR 104 | HOUSEHOLD 6 FOYER 101 | |
| N1-6-41 | NS2-104 | | C1 | DROP TILE | HOUSEHOLD 6 CORRIDOR 108 | HOUSEHOLD 6 CORRIDOR 108 | |
| N1-6-42 | NS2-104 | | C2 | DROP TILE | HOUSEHOLD 6 CORRIDOR 113 | HOUSEHOLD 6 HEARTHROOM 121 | |
| N1-6-43 | NS2-104 | | C2 | DROP TILE | HOUSEHOLD 6 CORRIDOR 128 | HOUSEHOLD 6 CORRIDOR 128 | |
| N1-6-44 | NS2-104 | | C2 | DROP TILE | HOUSEHOLD 6 CORRIDOR 122 | HOUSEHOLD 6 CORRIDOR 122 | |
| N1-6-45 | NS2-104 | | C2 | DROP TILE | HOUSEHOLD 6 CORRIDOR 113 | HOUSEHOLD 6 CORRIDOR 113 | |
| E1-6-46 | EXISTING | | C3 | WALL | HOUSEHOLD 6 PATIO | HOUSEHOLD 6 PATIO AND GATE | GOOSENECK, CORNER MOUNT, (4) 4MM, DEMOLISH EXISTING PTZ ELECTRONICS AND NON-CATEGORY CABLING |
| N1-6-47 | NS2-104 | | C1 | DROP TILE | HOUSEHOLD 7 CORRIDOR 104 | HOUSEHOLD 7 FOYER 101 | |
| N1-6-48 | NS2-104 | | C1 | DROP TILE | HOUSEHOLD 7 CORRIDOR 108 | HOUSEHOLD 7 CORRIDOR 108 | |
| N1-6-49 | NS2-104 | | C2 | DROP TILE | HOUSEHOLD 7 CORRIDOR 113 | HOUSEHOLD 7 HEARTHROOM 121 | |
| N1-6-50 | NS2-104 | | C2 | DROP TILE | HOUSEHOLD 7 CORRIDOR 128 | HOUSEHOLD 7 CORRIDOR 128 | |
| N1-6-51 | NS2-104 | | C2 | DROP TILE | HOUSEHOLD 7 CORRIDOR 113 | HOUSEHOLD 7 CORRIDOR 113 | |
| N1-6-52 | NS2-104 | | C2 | DROP TILE | HOUSEHOLD 7 CORRIDOR 122 | HOUSEHOLD 7 CORRIDOR 122 | |
| E1-6-53 | EXISTING | | C3 | WALL | HOUSEHOLD 7 PATIO | HOUSEHOLD 7 PATIO AND GATE | GOOSENECK, CORNER MOUNT, (4) 4MM, DEMOLISH EXISTING PTZ ELECTRONICS AND NON-CATEGORY CABLING |
| N1-6-54 | NS2-104 | | C1 | DROP TILE | HOUSEHOLD 8 CORRIDOR 104 | HOUSEHOLD 8 FOYER 101 | |
| N1-6-55 | NS2-104 | | C1 | DROP TILE | HOUSEHOLD 8 CORRIDOR 108 | HOUSEHOLD 8 CORRIDOR 108 | |
| N1-6-56 | NS2-104 | | C2 | DROP TILE | HOUSEHOLD 8 CORRIDOR 113 | HOUSEHOLD 8 HEARTHROOM 121 | |
| N1-6-57 | NS2-104 | | C2 | DROP TILE | HOUSEHOLD 8 CORRIDOR 128 | HOUSEHOLD 8 CORRIDOR 128 | |
| N1-6-58 | NS2-104 | | C2 | DROP TILE | HOUSEHOLD 8 CORRIDOR 113 | HOUSEHOLD 8 CORRIDOR 113 | |
| N1-6-59 | NS2-104 | | C2 | DROP TILE | HOUSEHOLD 8 CORRIDOR 122 | HOUSEHOLD 8 CORRIDOR 122 | |
| E1-6-60 | EXISTING | | C3 | WALL | HOUSEHOLD 8 PATIO | HOUSEHOLD 8 PATIO AND GATE | GOOSENECK, CORNER MOUNT, (4) 4MM, DEMOLISH EXISTING PTZ ELECTRONICS AND NON-CATEGORY CABLING |
| N1-6-61 | NS2-104 | | C2IR | HARD LID | CORRIDOR NS2-111 | CORRIDOR NS2-111, VESTIBULE | |
| N1-6-62 | NS2-104 | | C1IR | DROP TILE | CORRIDOR NS2-101 | CORRIDOR NS2-101 | |
| N1-6-63 | NC1-129 | | C1IR | DROP TILE | CORRIDOR NC1-126 | CORRIDOR NC1-126 | |
| N1-6-64 | NC1-129 | | C1IR | DROP TILE | CORRIDOR NC1-117 | CORRIDOR NC1-117 | |
| N1-6-65 | NC1-129 | | C1IR | DROP TILE | CORRIDOR NC1-138 | CORRIDOR NC1-138, EXTERIOR DOOR | |
| E1-6-66 | EXISTING | | C1IR | WALL | CORRIDOR NC1-101 | CORRIDOR NC1-101, EXTERIOR DOOR | |
| E1-6-68 | EXISTING | | C1IR | WALL | OUTSIDE PLAY AREA | OUTSIDE PLAY AREA | GOOSENECK, CORNER MOUNT, DEMOLISH EXISTING PTZ ELECTRONICS AND NON-CATEGORY CABLING |
| NB-7-01 | PB1-002 | | C1IR | DROP TILE | CORRIDOR PB1-007 | ELEVATOR | |
| N1-7-02 | PS1-105 | | C1 | DROP TILE | HOUSEHOLD 1 CORRIDOR 108 | HOUSEHOLD 1 CORRIDOR 108 | |
| N1-7-04 | PS1-105 | | C2 | DROP TILE | HOUSEHOLD 1 CORRIDOR 128 | HOUSEHOLD 1 CORRIDOR 128 | |
| N1-7-05 | PS1-105 | | C2 | DROP TILE | HOUSEHOLD 1 CORRIDOR 122 | HOUSEHOLD 1 CORRIDOR 122 | |
| N1-7-06 | PS1-105 | | C2 | DROP TILE | HOUSEHOLD 1 CORRIDOR 113 | HOUSEHOLD 1 CORRIDOR 113 | |
| E1-7-07 | EXISTING | | C3 | WALL | HOUSEHOLD 1 PATIO | HOUSEHOLD 1 PATIO AND GATE | GOOSENECK, CORNER MOUNT, (4) 4MM, DEMOLISH EXISTING PTZ ELECTRONICS AND NON-CATEGORY CABLING |
| N1-7-09 | PS1-105 | | C1 | DROP TILE | HOUSEHOLD 2 CORRIDOR 108 | HOUSEHOLD 2 CORRIDOR 108 | |
| N1-7-11 | PS1-105 | | C2 | DROP TILE | HOUSEHOLD 2 CORRIDOR 128 | HOUSEHOLD 2 CORRIDOR 128 | |
| N1-7-12 | PS1-105 | | C2 | DROP TILE | HOUSEHOLD 2 CORRIDOR 113 | HOUSEHOLD 2 CORRIDOR 113 | |
| N1-7-13 | PS1-105 | | C2 | DROP TILE | HOUSEHOLD 2 CORRIDOR 122 | HOUSEHOLD 2 CORRIDOR 122 | |
| E1-7-14 | EXISTING | | C3 | WALL | HOUSEHOLD 2 PATIO | HOUSEHOLD 2 PATIO AND GATE | GOOSENECK, CORNER MOUNT, (4) 4MM, DEMOLISH EXISTING PTZ ELECTRONICS AND NON-CATEGORY CABLING |
| N1-7-15 | PS1-105 | | C1IR | DROP TILE | CORRIDOR PC1-107 | ELEVATOR | |
| E1-7-17 | EXISTING | | C1IR | WALL | PC1-101 | PC1-101, EXTERIOR DOOR | |
| N1-7-22 | PS2-107 | | C1 | DROP TILE | HOUSEHOLD 3 CORRIDOR 108 | HOUSEHOLD 3 CORRIDOR 108 | |
| N1-7-24 | PS2-107 | | C2 | DROP TILE | HOUSEHOLD 3 CORRIDOR 128 | HOUSEHOLD 3 CORRIDOR 128 | |
| N1-7-25 | PS2-107 | | C2 | DROP TILE | HOUSEHOLD 3 CORRIDOR 113 | HOUSEHOLD 3 CORRIDOR 113 | |
| N1-7-26 | PS2-107 | | C2 | DROP TILE | HOUSEHOLD 3 CORRIDOR 122 | HOUSEHOLD 3 CORRIDOR 122 | |
| E1-7-27 | EXISTING | | C3 | WALL | HOUSEHOLD 3 PATIO | HOUSEHOLD 3 PATIO AND GATE | GOOSENECK, CORNER MOUNT, (4) 4MM, DEMOLISH EXISTING PTZ ELECTRONICS AND NON-CATEGORY CABLING |
| N1-7-29 | PS2-107 | | C1 | DROP TILE | HOUSEHOLD 4 CORRIDOR 108 | HOUSEHOLD 4 CORRIDOR 108 | |
| N1-7-31 | PS2-107 | | C2 | DROP TILE | HOUSEHOLD 4 CORRIDOR 128 | HOUSEHOLD 4 CORRIDOR 128 | |
| N1-7-32 | PS2-107 | | C2 | DROP TILE | HOUSEHOLD 4 CORRIDOR 122 | HOUSEHOLD 4 CORRIDOR 122 | |
| N1-7-33 | PS2-107 | | C2 | DROP TILE | HOUSEHOLD 4 CORRIDOR 113 | HOUSEHOLD 4 CORRIDOR 113 | |
| E1-7-34 | EXISTING | | C3 | WALL | HOUSEHOLD 4 PATIO | HOUSEHOLD 4 PATIO AND GATE | GOOSENECK, CORNER MOUNT, (4) 4MM, DEMOLISH EXISTING PTZ ELECTRONICS AND NON-CATEGORY CABLING |

1 CAMERA SCHEDULE
SCALE: NS

SCHEDULE NUMBERS KEY:
1 - DACK
2 - LOFTUS
3 - SHEELER
4 - HEINZ HALL
5 - MALLOY
6 - KENNETH ULERY
7 - AMOS FOX

GENERAL NOTES:
1. SCHEDULE IS FOR REFERENCE ONLY AND SHOULD NOT BE USED FOR COUNTS. THE CONTRACTOR SHALL VERIFY EACH CAMERA LOCATION WITH THE FLOOR PLANS. THE FINAL VIEW AREA SHALL BE DETERMINED BY THE OWNER DURING CAMERA INSTALL AND POSITIONING.

| Camera Type | Manufacturer | Approved Equals | Part # | General Description | Total Counts |
|---|---|---|---|---|---|
| C1 | Samsung | Arecont, Panasonic, Axis | SNV-5084 | 1.3MP, low light | 26 |
| C1ir | Samsung | Arecont, Panasonic, Axis | SNV-5084R | 1.3MP, low light, IR | 26 |
| C2 | Samsung | Arecont, Panasonic, Axis | SNV-6084 | 2MP | 77 |
| C2ir | Samsung | Arecont, Panasonic, Axis | SNV-6084R | 2MP, IR | 14 |
| C3 | Arecont | NA | AV12176DN-NL | 12 MP, WDR, 4 sensor modular camera | 15 |

2 CAMERA TYPE SCHEDULE
SCALE: NS

GENERAL NOTES:
1. SCHEDULE IS FOR A QUICK REFERENCE GUIDE. REFER TO SPECIFICATIONS FOR CAMERA PERFORMANCE REQUIREMENTS AND APPROVED EQUALS

elert & associates
140 Third Street South
Stillwater, MN 55082
651.430.2772 fax: 651.430.2661
www.elert.com

# IOWA VETERAN'S HOME SECURITY CAMERA UPGRADE

IOWA VETERAN'S HOME
1301 SUMMIT ST, MARSHALLTOWN, IA 50158

| Revision: | Date: |
|---|---|
| 1 ADDENDUM 1 | 01/26/2016 |
| 100% CD | 12/31/2015 |

Project No.:
Checked By: TP
Designed By: TP/BF/JM
Drawn By: MA/JM
Scale: as shown
Date: 12/31/2015

CAMERA SCHEDULE

T600

Elert & Associates Copyright-All Rights Reserved