PORT ARTHUR TRANSIT PARKING LOT
EV BUS PARKING CANOPY AND DRIVEWAY PROJECT
342 DALLAS AVE, PORT ARTHUR, TX 77640

CITY OF PORT ARTHUR, TEXAS

CITY OF PORT ARTHUR PN: 21-287
THE SOLCO GROUP PN: 2021-06-1087
MARCH 2026

100% DESIGN

CITY OFFICIALS

MAYOR:	CHARLOTTE M. MOSES
DISTRICT 1:	WILLIE LEWIS, JR.
DISTRICT 2:	TIFFANY L HAMILTON EVERFIELD
DISTRICT 3:	DONEANE BECKCOM
DISTRICT 4:	HAROLD DOUCET, SR. - MAYOR PRO TEM
POSITION 5 - AT LARGE:	THOMAS KINLAW III
POSITION 6 - AT LARGE:	DONALD FRANK, SR.

CITY OF PORT ARTHUR APPROVAL

BY: _____
DIRECTOR OF ENGINEERING

CITY OF PORT ARTHUR APPROVAL

BY: _____
DIRECTOR OF TRANSIT

LOCATION MAP
N.T.S

SHEET INDEX		
DWG NO.	SHEET NO.	SHEET TITLE
		CIVIL PLANS
G0.01	1	COVER SHEET AND SHEET INDEX
G0.02	2	GENERAL NOTES
G0.03	3	BID SCHEDULE
C1.01	4	SURVEY PLANS
C2.01	5	DEMOLITION PLAN
C3.01	6	PAVING PLAN
C3.01A	7	1-LINE DETAIL WATER SERVICE TO EXT. HOSE BIB
C3.02	8	LOT AND DRIVEWAY TYPICAL SECTION
C3.03	9	CONCRETE PAVING DETAILS
C3.04	10	CONCRETE PAVING DETAILS
CCCG-22	11	CONCRETE CURB AND CUR AND GUTTER
MCPSWMD-19	12	MISCELLANEOUS CURB, PATH SIDEWALK AND MEDIAN DETAILS
JS-14	13	CONCRETE PAVING DETAILS JOINT SEALS
C4.01	14	GRADING DRAINAGE AND EROSION CONTROL PLAN
C4.02	15	DRAINAGE SUMMARY
C4.03	16	DRAINAGE DETAILS
C5.01	17	STORM WATER POLLUTION PREVENTION PLAN
EC (1)-16	18	SWPPP – FENCE & VERTICAL TRACKING
EC (9)-16	19	SWPPP – EROSION CONTROL LOG
BC (1)-21	20	BARRICADE & CONSTRUCTION GENERAL NOTES & REQUIREMENTS
BC (8)-21	21	BARRICADE AND CONSTRUCTION CHANNELING DEVICES
BC (10)-21	22	BARRICADE AND CONSTRUCTION CHANNELING DEVICES
C6.01	23	FENCING DETAILS
		ARCHITECTURAL PLANS
G1.01	24	LIFE SAFETY INFORMATION
A0.01	25	GENERAL ARCHITECTURAL INFORMATION
AS1.01	26	ARCHITECTURAL SITE PLAN
A1.01	27	FLOOR PLAN
A1.02	28	ROOF PLAN
A2.01	29	EXTERIOR ELEVATIONS
A.3.01	30	BUILDING SECTION
A3.02	31	WALL SECTIONS
A3.03	32	WALL SECTIONS
A5.01	33	ENLARGED WALL DETAILS
A7.01	34	REFLECTED CEILING PLAN
A9.01	35	3D PERSPECTIVE
		STRUCTURAL PLANS
S0.01	36	STRUCTURAL ABBREVIATIONS
S1.01	37	GENERAL NOTES
S1.02	38	GENERAL NOTES
S1.03	39	GENERAL NOTES
S1.04	40	SPECIAL INSPECTIONS
S1.05	41	SPECIAL INSPECTIONS
S2.01	42	PLANS
S3.01	43	TYPICAL DETAILS – FOUNDATION
S3.02	44	TYPICAL DETAILS – STEEL FRAMING
S4.01	45	TYPICAL DETAILS – CONCRETE TILT WALLS
S4.02	46	TILT PANEL ELEVATIONS
S4.03	47	TILT PANEL ELEVATIONS
S5.01	48	FOUNDATION DETAILS
S6.01	49	FRAMING DETAILS
		ELECTRICAL PLANS
E0.01	50	ELECTRICAL LEGEND AND ABBREVIATIONS
E1.01	51	ELECTRICAL SITE PLAN
E2.01	52	BUS CANOPY LIGHTING PLAN
E2.02	53	BUS CANOPY POWER PLAN
E3.01	54	ENLARGED POWER PLAN
E4.01	55	ELECTRICAL ONE-LINE DIAGRAM
E5.01	56	ELECTRICAL HANDHOLE & DUCT BANK DETAILS
E5.02	57	POWER EQUIPMENT RACK DETAILS
E5.03	58	UTILITY TRANSFORMER PAD LAYOUT
C.100	59	FIBER CONDUIT DETAIL RUN

TBPE FIRM #22626

NO.	DATE	REVISION

STATE OF TEXAS
KELVIN L SOLCO
78161
LICENSED PROFESSIONAL ENGINEER
03/02/26

DATE: MAR 2026

PROJECT TITLE:
PORT ARTHUR TRANSIT PARKING LOT

DRAWING TITLE:
COVER PAGE

DRAWING NUMBER: G0.01

SHEET NUMBER: 1 SHEET TOTAL: 59

SCALE: N.T.S

DRAWN BY: SK CHECKED BY: KS

December 16, 2025 – 1:18pm
C:\The Solco Group\City of Port Arthur Transit\13. CADD – Canopy\2021-06-1087-PAT-COVER PAGE.dwg

CITY OF PORT ARTHUR CONTACTS

CONTRACT MANAGEMENT

IVAN MITCHELL
TRANSIT DIRECTOR
CITY OF PORT ARTHUR
PORT ARTHUR TRANSIT
344 PROCTER STREET
PORT ARTHUR, TX 77640-6450
OFFICE: (409) 983-8793
FAX: (409) 983-8609
E-MAIL: IVAN.MITCHELL@PORTARTHURTX.GOV

CITY ENGINEER

SUHAIL KANWAR, PE
CITY OF PORT ARTHUR, TEXAS
OFFICE: (409) 983-8189
MOBILE: (409) 728-4399

ENVIRONMENTAL

1. IN THE EVENT THAT UNANTICIPATED CONTAMINATION IS ENCOUNTERED DURING CONSTRUCTION, WORK IN THE IMMEDIATE AREA WILL CEASE. CONTRACTOR SHALL NOTIFY THE RPR AND ENGINEER TO CONTACT THE RELEVANT ENVIRONMENTAL AUTHORITY.

2. ALL WASTE MATERIAL SHALL BE DISPOSED OF OFF-SITE IN ACCORDANCE WITH ALL THE LOCAL, STATE AND FEDERAL REGULATIONS.

EXISTING TOPOGRAPHY

1. EXISTING TOPOGRAPHY SHOWN ON THE PLANS ARE BASED ON THE SURVEYED TERRAIN FOR THE CONSTRUCTION LIMITS OF THE PROJECT. THE CONTRACTOR SHALL FIELD VERIFY THAT THE EXISTING TOPOGRAPHY SHOWN IS REASONABLY ACCURATE. IF THE ACCURACY IS IN QUESTION THE CONTRACTOR SHALL NOTIFY THE ENGINEER AT LEAST TWO WEEKS PRIOR TO THE START OF CONSTRUCTION AND A COURSE OF ACTION WILL BE DETERMINED AT THAT TIME.

CONSTRUCTION ACTIVITIES

1. THIS PROJECT SHALL BE CONSTRUCTED IN ACCORDANCE WITH THE CONTRACT PLANS AND SPECIFICATIONS. THE PROJECT IS SUBJECT TO INSPECTION BY REPRESENTATIVES OF CITY OF CITY ARTHUR AND THE ENGINEER.

2. CONTRACTOR AND CONSTRUCTION ACTIVITIES SHALL COMPLY WITH ALL PLANS AND SPECIFICATIONS.

3. THE CONTRACTOR SHALL SUBMIT A DETAILED CONSTRUCTION PROGRESS SCHEDULE TO THE CITY, ENGINEER AND RESIDENT PROJECT REPRESENTATIVE (RPR) EVERY MONTH.

4. ALL MATERIAL SUBMITTALS FOR ITEMS TO BE USED IN CONSTRUCTION OF THE PROJECT SHALL BE SUBMITTED TO THE ENGINEER FOR REVIEW AND APPROVAL 14 DAYS PRIOR TO COMMENCEMENT OF THE ASSOCIATED WORK.

5. THE PROJECT PAY ITEMS ARE PROVIDED TO BE INCLUSIVE OF ALL WORK TO BE PERFORMED AS SHOWN IN THESE PLANS. ALL WORK NOT IDENTIFIED WITH A SPECIFIC PAY ITEM IS TO BE CONSIDERED REQUIRED/INCIDENTAL WORK TO COMPLETE THE PROJECT AND IS TO BE INCLUDED IN THE COST OF THE PROJECT PAY ITEMS PROVIDED.

6. CONTRACTOR IS RESPONSIBLE FOR MAINTAINING SAFETY FOR CONSTRUCTION PERSONNEL AND EQUIPMENT AT ALL TIMES.

7. CONTRACTOR SHALL REPAIR OR REPLACE ALL ITEMS NOT DESIGNATED FOR DEMOLITION OR REMOVAL THAT ARE DAMAGED BY CONSTRUCTION EFFORTS. THE CONTRACTOR SHALL BE RESPONSIBLE FOR THE IMMEDIATE REPAIR OF ANY DAMAGE TO CITY FACILITIES, INCLUDING BUT NOT LIMITED TO EXISTING PAVEMENTS, UNDERGROUND UTILITIES, LIGHTS, SIGNS, FENCES, EQUIPMENT, ETC. CAUSED DURING CONSTRUCTION. ALL REPAIRS MUST BE MADE IN COORDINATION WITH THE OWNER AND TO EQUAL OR BETTER QUALITY AND IN COMPLIANCE WITH THE CITY. ALL REPAIR AND REPLACEMENT COST SHALL BE AT THE EXPENSE OF THE CONTRACTOR.

8. THE CONTRACTOR SHALL BE RESPONSIBLE FOR THE EFFORT AND COST OF IMMEDIATE CLEANING OF EARTH TRACKING AND SPILLS RESULTING FROM THE CONTRACTOR'S OPERATIONS.

9. CONSTRUCTION AREA LIMITS: THE LIMITS OF CONSTRUCTION MATERIAL STORAGE AREAS, PLAN SITE, EQUIPMENT STORAGE AREA, PARKING AREA AND OTHER AREAS DEFINED AS REQUIRED FOR THE CONTRACTOR'S EXCLUSIVE USE DURING CONSTRUCTION SHALL BE MARKED BY THE CONTRACTOR.

10. THE CONTRACTOR SHALL BE RESPONSIBLE OF COMPLYING WITH ALL FEDERAL, STATE, AND LOCAL LAWS AND SHALL OBTAIN ALL NECESSARY PERMITS REQUIRED FOR CONSTRUCTION.

SEE DRAWING PAGE 56 - SCOPE FOR FIBER CONDUIT RUN:

1. SEE DRAWING BOX TITLED "OVERALL CONDUIT RUN"
2. CONSTRUCTION START AT PROPOSED PULL BOX AT THE INTERSECTION OF DALLAS AVENUE AND ALLEY
3. PULL BOX HAS BEEN PLACED FROM PRIOR PROJECT. CONTRACTOR MUST FIELD VERIFY LOCATION
4. PROVIDE APPROXIMATELY 225 LF 2" PVC SCHEDULE 40 CONDUIT WITH PULL STRING TO TRANSIT TERMINAL AS SHOWN

HAUL ROUTES, STAGING AREAS AND SITE ACCESS

1. THE CONTRACTOR WILL BE RESPONSIBLE FOR PROVIDING AND MAINTAINING STAGING AREA AND HAUL ROUTE AS NECESSARY FOR HIS OPERATIONS. THIS ITEMS SHALL BE SUBSIDIARY TO OTHER ITEMS IN THE CONTRACT.

2. CONTRACTOR SHALL PROVIDE ACCESS ROUTE PLAN FOR APPROVAL BY THE CITY PRIOR TO THE BEGINNING OF CONSTRUCTION. THE ACTUAL SIZE AND LOCATION OF THE STAGING AREA AND HAUL ROUTE WILL BE APPROVED BY THE CITY PRIOR TO CONSTRUCTION.

4. IT SHALL BE THE CONTRACTORS' RESPONSIBILITY TO COORDINATE ALL OFF-CITY ROUTES WITH THE APPROPRIATE AUTHORITIES.

5. HAUL TRUCKS TRANSPORTING LOOSE MATERIAL OFF CITY PROPERTY SHALL USE LOAD COVERS AND SHALL BE LOADED SUCH THAT NO SPILLAGE OCCURS DURING TRANSIT. ALL CONTRACTOR EQUIPMENT MUST BE MAINTAINED IN GOOD WORKING ORDER. CONTRACTOR VEHICLES THAT LEAK OR DRIP OIL AND/OR FLUIDS MUST BE IMMEDIATELY REMOVED FROM THE PROJECT FOR REPAIR AND THE SPILL CLEANED UP IN ACCORDANCE WITH STATE AND FEDERAL REQUIREMENTS.

6. THE CONTRACTOR SHALL BE RESPONSIBLE FOR PROVIDING HIS/HER OWN COMPLETE UTILITY SERVICES. THE CITY WILL NOT PROVIDE FACILITIES AND SERVICES TO THE CONTRACTOR DURING CONSTRUCTION. THE CONTRACTOR'S PERSONNEL ARE PROHIBITED FROM UTILIZING THE CITY OFFICE. ASSOCIATED COST WILL BE SUBSIDIARY TO OTHER ITEMS IN THE CONTRACT.

7. THE AREAS UTILIZED AS THE CONTRACTOR'S STAGING AREA, PARKING, LAYDOWN, STORAGE AREA, AND THE HAUL ROUTES ARE TO BE RESTORED TO THE ORIGINAL CONDITION AT THE END OF THE PROJECT. ALL EXISTING ROADS OR PAVEMENTS USED AS ACCESS/HAUL ROADS SHALL BE MAINTAINED AND IMPROVED AS REQUIRED. THE ROAD OR PAVEMENT CONDITIONS WILL BE INSPECTED JOINTLY BY THE ENGINEER AND CONTRACTOR PRIOR TO AND AT THE END OF THE PROJECT. THE CONDITION OF THESE ROADS AND PAVEMENTS SHALL BE EQUAL OR BETTER THAN AT THE START OF THE PROJECT AS DETERMINED BY THE ENGINEER. MECHANICAL BROOMS WILL BE REQUIRED BY THE ENGINEER FOR THESE EXISTING PAVEMENT ACCESS ROADS IF CONDITIONS ARE NOT BEING MAINTAINED (IN THE OPINION OF THE ENGINEER OR RPR) BY THE CONTRACTOR.

8. CONSTRUCTION EQUIPMENT AND VEHICLES SHALL NOT TRAVEL ON NEWLY CONSTRUCTED PAVEMENT. THE CONTRACTOR SHALL BE RESPONSIBLE FOR REPAIR OF ANY DAMAGE TO THE NEWLY CONSTRUCTED PAVEMENT, ALL REPAIRS SHALL BE AT THE CONTRACTORS OWN EXPENSE.

9. ALL EQUIPMENT MUST BE RETURNED TO THE STAGING AREA AT THE END OF EACH WORK DAY AND WHEN NOT ENGAGED IN THE CONSTRUCTION DURING NON-WORKING DAYS AND NIGHTS UNLESS APPROVED BY THE OWNER. THE OWNER WILL DESIGNATE AREAS FOR CONTRACTOR'S EMPLOYEES AUTO PARKING.

10. ACCESS TO THE SITE:

    a. THE CONTRACTOR SHALL BE RESPONSIBLE FOR TRAFFIC CONTROL TO AND FROM THE VARIOUS CONSTRUCTION AREAS ON THE SITE.

    b. THE CONTRACTOR SHALL NOT PERMIT ANY UNAUTHORIZED CONSTRUCTION PERSONNEL OR TRAFFIC ON THE SITE.

    c. THE CONTRACTOR IS RESPONSIBLE FOR IMMEDIATE CLEAN UP OF ANY DEBRIS DEPOSITED ALONG THE ACCESS ROUTE AS A RESULT OF HIS CONSTRUCTION TRAFFIC.

    d. ANY TRAFFIC CONTROL SIGN AND DEVICES PLACED IN THE COURSE OF THE PROJECT SHALL BE IN ACCORDANCE WITH THE MANUAL OF UNIFORM TRAFFIC CONTROL DEVICES (MUTCD) OR AS APPROVED IN WRITING FROM SHOP DRAWINGS SUBMITTED TO THE ENGINEER PRIOR TO SIGN PLACEMENT.

    e. THE CONTRACTOR WILL BE LIABLE FOR ANY FINES ISSUED BY THE COUNTY AND CITY OPERATIONS FOR TRAFFIC VIOLATIONS AND SECURITY VIOLATIONS FOR WHICH IT IS CITED.

EXISTING CONDITIONS/UNDERGROUND AND CONCEALED

1. CONTRACTOR TO FIELD VERIFY EXISTING CONDITIONS PRIOR TO BEGINNING CONSTRUCTION AND REPORT TO THE ENGINEER ANY VARIATIONS FROM THE INFORMATION SHOWN ON CONSTRUCTION PLANS.

2. CONTRACTOR SHALL BE RESPONSIBLE FOR THE LOCATION AND IDENTIFICATION OF ALL EXISTING UTILITIES AND PIPELINES IN THE CONSTRUCTION AREA. ANY DAMAGE TO EXISTING UTILITIES OR PIPELINES (ON OR OFF CITY PROPERTY) DAMAGED BY CONTRACTOR SHALL BE THE RESPONSIBILITY OF THE CONTRACTOR. CONTRACTOR SHALL REPAIR ALL UTILITY/PIPELINE DAMAGED BY CONTRACTOR AT NO ADDITIONAL COST TO OWNER.

3. ANY UNPLANNED, UNAPPROVED OR ACCIDENTAL SHUTDOWN OR INTERRUPTION OF SERVICE TO ANY LIGHTING CIRCUIT REQUIRES IMMEDIATE NOTIFICATION OF THE OWNER BY THE CONTRACTOR. ALL NECESSARY REPAIRS WILL BE AT CONTRACTORS EXPENSE.

4. THE CONTRACTOR SHALL BE RESPONSIBLE FOR STAKING AND GRADE CONTROL OF ALL ELEMENTS OF THE PROJECT AT NO ADDITIONAL COST TO THE OWNER.

5. CONTRACTOR SHALL VERIFY ALL SURVEY CONTROL, ELEVATIONS, AND EXISTING GRADES PRIOR TO BEGINNING CONSTRUCTION. ANY DISCREPANCIES SHALL BE RECITYED TO THE ENGINEER PRIOR TO BEGINNING CONSTRUCTION.

6. THE CONTRACTOR SHALL PROVIDE AND MAINTAIN ALL HORIZONTAL AND VERTICAL CONSTRUCTION STAKING AS REQUIRED FOR THE PROJECT DEVELOPMENT.

7. CONTRACTOR SHALL ESTABLISH ANY ADDITIONAL CONTROL POINTS DEEMED NECESSARY BY CONSTRUCTION PERSONNEL PRIOR TO BEGINNING THE WORK.

TBPE FIRM #22626

NO.	DATE	REVISION

STATE OF TEXAS
KELVIN L SOLCO
78161
LICENSED
PROFESSIONAL ENGINEER
03/02/26

DATE: MAR 2026

PROJECT TITLE:

PORT ARTHUR TRANSIT PARKING LOT

DRAWING TITLE:

GENERAL NOTES

DRAWING NUMBER: G0.02

SHEET NUMBER: 2

SHEET TOTAL: 59

SCALE: N.T.S

DRAWN BY: SK

CHECKED BY: KS

June 11, 2024 – 10:44am
C:\The Solco Group\City of Port Arthur Transit\13. CADD – Canopy\2021-06-1087-PAT-GENERAL NOTES.dwg

BID SCHEDULE

Construct EV Bus Transit Canopy and Reconstruct Existing Parking Lot

Pay Item	Spec No.	Description	Units	Bid QTY	Final QTY	Remarks
1	DIV 01	General Requirements	LS	1		
2	DIV 02	Existing Conditions	LS	1		
3	DIV 03	Concrete	LS	1		
4	DIV 04	Masonry	LS	1		
5	DIV 05	Metals	LS	1		
6	DIV 06	Woods and Plastics	LS	1		
7	DIV 07	Thermal & Moisture Protection	LS	1		
8	DIV 08	Openings	LS	1		
9	DIV 09	Finishes	LS	1		
10	DIV 010	Specialties	LS	1		
11	DIV 011	Equipment	LS	1		
12	DIV 012	Furnishings	LS	1		
13	DIV 013	Special Construction	LS	1		
14	DIV 014	Conveying Equipment	LS	1		
15	DIV 021	Fire Suppression	LS	1		
16	DIV 022	Plumbing	LS	1		
17	DIV 023	Heating, Ventilation, and Air Conditioning	LS	1		
18	DIV 026	Electrical	LS	1		
19	DIV 027	Communications	LS	1		
20	DIV 031	Earthwork	LS	1		
21	DIV 032	Exterior Improvements	LS	1		
22	DIV 033	Utilities	LS	1		
23	DIV 034	Electrical Power Generation	LS	1		
24	TxDOT 500	Mobilization	LS	1		
25	TxDOT 502	Barricades, Signs, and Traffic Handling	LS	1		
26	TxDOT 104	Sawcut, Remove and Dispose Existing Concrete Foundation Full Depth (9 inches Slab and Footings)	SY	1551		
27	TxDOT 104	Sawcut, Remove and Dispose Existing Sidewalk Full Depth	SF	520		
28	TxDOT 110	Unclassified Excavation	CY	3570		
29	TxDOT 110	Select Fill	CY	3570		
30	TxDOT 247	Flexible Base - Type A, Grade 1 (8 Inches)	SY	1020		
31	TxDOT 360	Reinforced Portland Cement Concrete (8.5 Inches)	SY	1020		
32	TxDOT 496	Sawcut, Remove and Dispose Existing Concrete Curb (Type II) (6"-8" Height)	LF	35		
33	TxDOT 531	Sidewalk	SY	50		
34	TxDOT 550	Remove Existing Chain Link Fence	LF	140		
35	TxDOT 550	New 7' Wrought Iron Fence	LF	140		
36	5084	Bollards	EA	14		
37	00741	Gravel Bag Curb Inlet Protection Barrier	LF	16		
38	SS 5706	1" HDPE Water Line	LF	75		
39	SS 5706	3/4" HDPE Water Line to Hose Bib	LF	10		
40	Product 2	Backflow Preventer/installation	EA	1		
41	TxDOT 104	Sawcut, Remove and Dispose Existing Concrete Pavement Full Depth	SY	689		
42	TxDOT 275	Cement Treated (Mix Existing Material) (6 - 8 Inches)	SY	689		
43	TxDOT 360	Reinforced Portland Cement Concrete (5 Inches)	SY	689		
44	TxDOT 610	Trenching and Installation of Conduit for Fiber Optic Cable	LF	225		
45	TxDOT 550	Remove and Relocate existing 7' Wrought Iron Fence In Alley	LF	30		
46		Protect Existing Underground Utilities	LS	1		
47	260519-1	Electrical Feeder, (3) 300KCMIL, #1/0G, 3-Wire/Phase in 3-Way, 3" Sch 40 PVC, Concrete Encased	LF	10		
48	260519-2	Electrical Feeder, (3) 300KCMIL, #1/0G, 3-Wire/Phase in 6-Way, 3" Sch 40 PVC, Concrete Encased	LF	139		
49	260519-3	3-Way, 3" Sch 40 PVC, Concrete Encased	LF	75		
50	260533-1	4'x4'x4' Traffic Rated Handhole	EA	2		
51	263416-1	Electrical Service Modifications	LS	1		
52	265600-1	Interior Canopy Lighting and Power	LS	1		
53	265600-2	Exterior Canopy Lighting	LS	1		
54	262416-1	Electrical Distribution Equipment	LS	1		
55	262416-2	Bus Charging Station W/ 2 Dispensers	EA	4		
56	262416-3	Bus Charging Station W/ 1 Dispenser	EA	1		

City of Port Arthur Texas

TBPE FIRM #22626

NO.	DATE	REVISION

STATE OF TEXAS
KELVIN L. SOLCO
78161
LICENSED
PROFESSIONAL ENGINEER
03/02/26

THIS DOCUMENT IS RELEASED FOR THE PURPOSE OF REVIEW ONLY UNDER THE AUTHORITY OF KELVIN SOLCO, P.E. 78161 ON 01/05/2026. IT SHALL NOT BE USED FOR CONSTRUCTION, BIDDING, RECORDATION, CONVEYANCE, SALES, OR AS THE BASIS FOR ISSUANCE OF A PERMIT.

DATE: MAR 2026

PROJECT TITLE:

PORT ARTHUR TRANSIT PARKING LOT

DRAWING TITLE:

BID SCHEDULE

DRAWING NUMBER: G0.03

SHEET NUMBER: 3

SHEET TOTAL: 59

SCALE: 1" = 6'

DRAWN BY: AM

CHECKED BY: KS

January 23, 2026 – 10:49am
C:\The Solco Group\City of Port Arthur Transit\13. CADD – Canopy\2021-06-1087-PAT-SURVEY PLAN.dwg

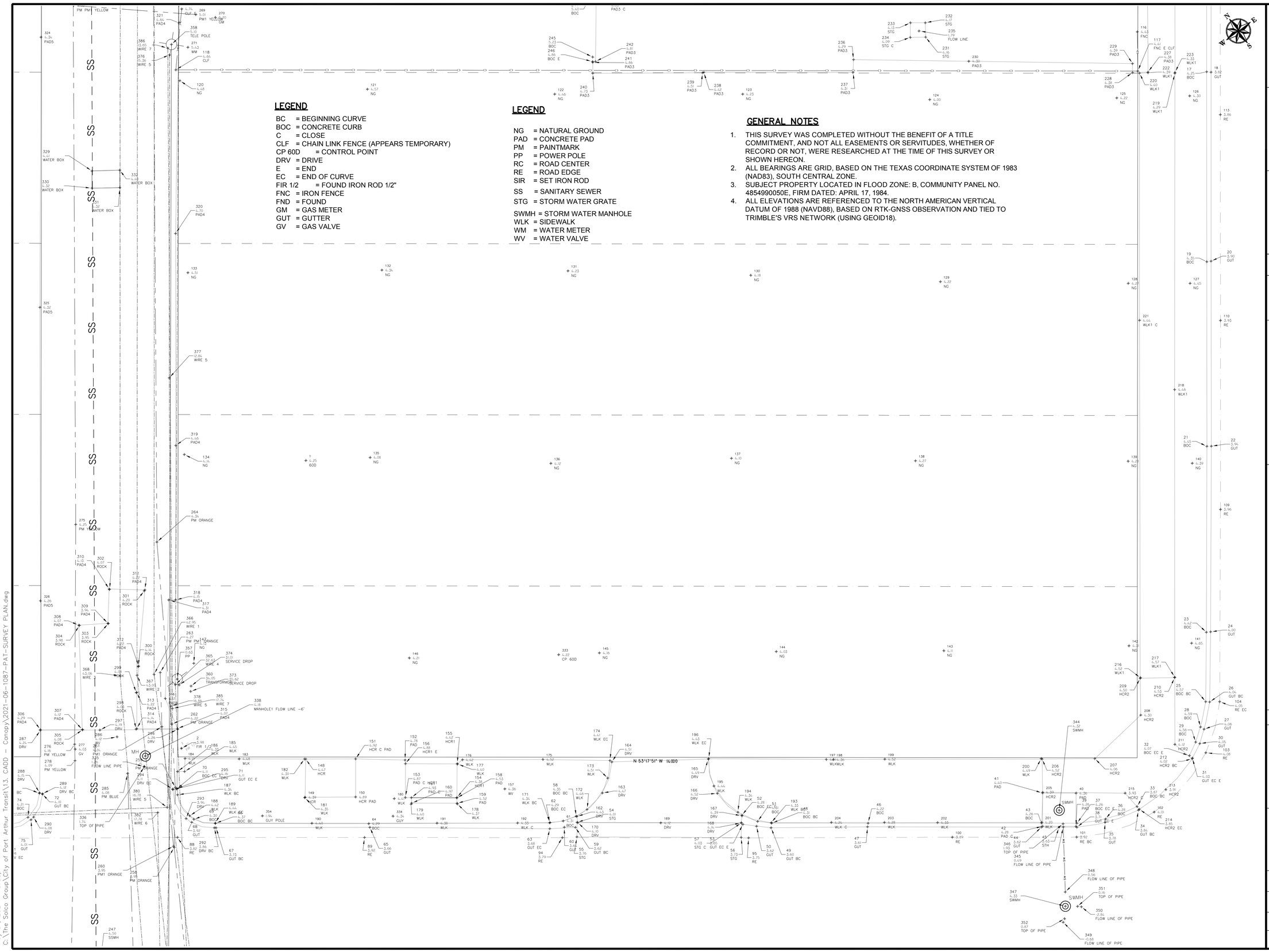

LEGEND

BC = BEGINNING CURVE
BOC = CONCRETE CURB
C = CLOSE
CLF = CHAIN LINK FENCE (APPEARS TEMPORARY)
CP 60D = CONTROL POINT
DRV = DRIVE
E = END
EC = END OF CURVE
FIR 1/2 = FOUND IRON ROD 1/2"
FNC = IRON FENCE
FND = FOUND
GM = GAS METER
GUT = GUTTER
GV = GAS VALVE

LEGEND

NG = NATURAL GROUND
PAD = CONCRETE PAD
PM = PAINTMARK
PP = POWER POLE
RC = ROAD CENTER
RE = ROAD EDGE
SIR = SET IRON ROD
SS = SANITARY SEWER
STG = STORM WATER GRATE
SWMH = STORM WATER MANHOLE
WLK = SIDEWALK
WM = WATER METER
WV = WATER VALVE

GENERAL NOTES

1. THIS SURVEY WAS COMPLETED WITHOUT THE BENEFIT OF A TITLE COMMITMENT, AND NOT ALL EASEMENTS OR SERVITUDES, WHETHER OF RECORD OR NOT, WERE RESEARCHED AT THE TIME OF THIS SURVEY OR SHOWN HEREON.
2. ALL BEARINGS ARE GRID, BASED ON THE TEXAS COORDINATE SYSTEM OF 1983 (NAD83), SOUTH CENTRAL ZONE.
3. SUBJECT PROPERTY LOCATED IN FLOOD ZONE: B, COMMUNITY PANEL NO. 4854990050E, FIRM DATED: APRIL 17, 1984.
4. ALL ELEVATIONS ARE REFERENCED TO THE NORTH AMERICAN VERTICAL DATUM OF 1988 (NAVD88), BASED ON RTK-GNSS OBSERVATION AND TIED TO TRIMBLE'S VRS NETWORK (USING GEOID18).

City of Port Arthur Texas

TBPE FIRM #22626

NO.	DATE	REVISION

STATE OF TEXAS
KELVIN L SOLCO
78161
LICENSED
PROFESSIONAL ENGINEER
03/02/26

DATE: MAR 2026

PROJECT TITLE:

PORT ARTHUR TRANSIT PARKING LOT

DRAWING TITLE:

SURVEY PLAN

DRAWING NUMBER: C1.01

SHEET NUMBER: 4

SHEET TOTAL: 59

SCALE: 1" = 6'

DRAWN BY: SK

CHECKED BY: KS

May 31, 2024 – 5:58pm
C:\The Solco Group\City of Port Arthur Transit\3. CADD – Canopy\2021-06-1087-PAT-SURVEY PLAN.dwg

LEGEND:

SAWCUT REMOVE AND DISPOSE EXISTING CONCRETE PAVEMENT FULL DEPTH

LF = LINEAR FEET
SY = SQUARE YARDS

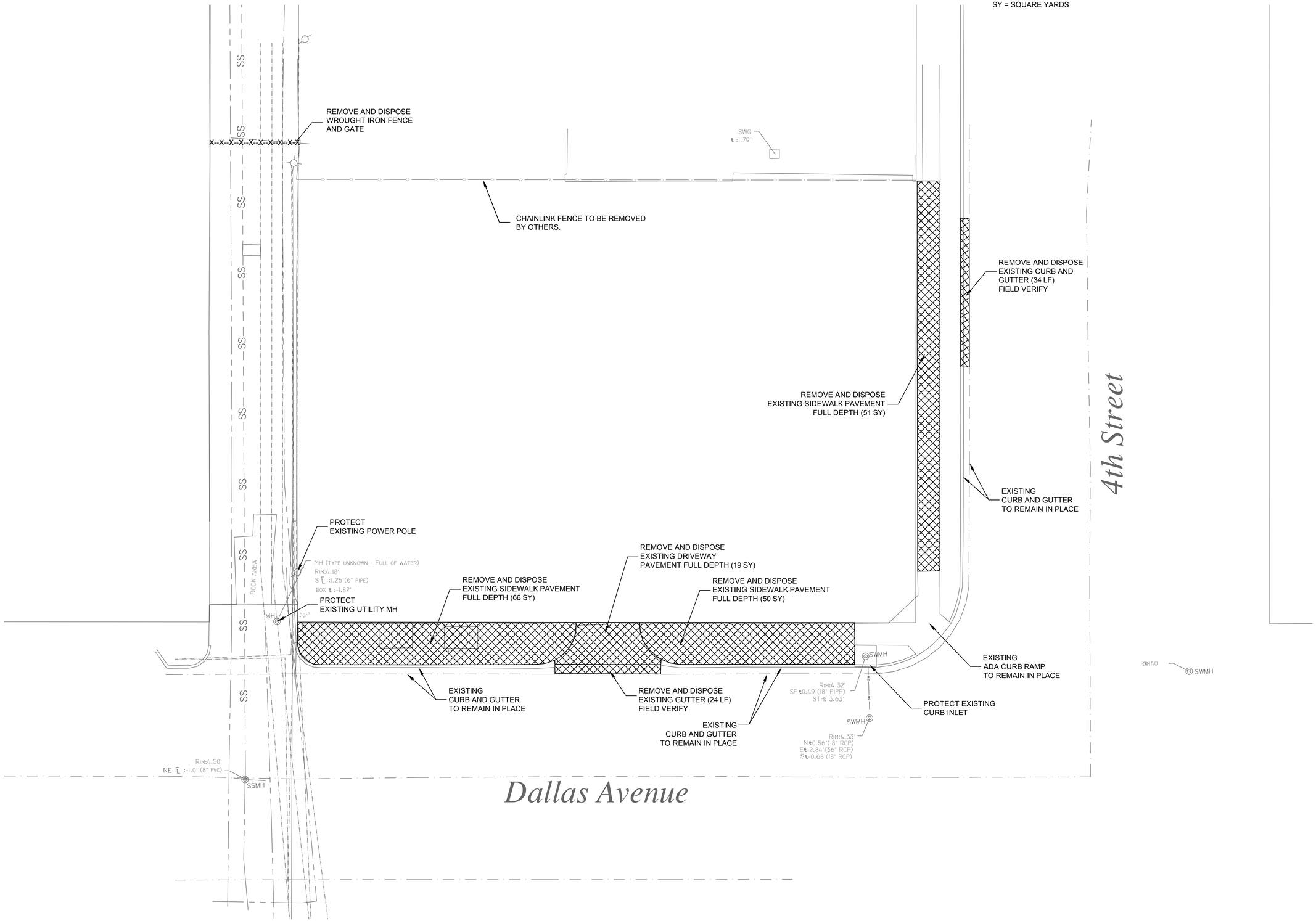

May 29, 2024 – 12:12pm
C:\The Solco Group\City of Port Arthur Transit\13. CADD – Canopy\2021-06-1087-PAT-DEMOLITION PLAN.dwg

City of Port Arthur Texas

TBPE FIRM #22626

NO.	DATE	REVISION

STATE OF TEXAS
KELVIN L. SOLCO
78161
LICENSED PROFESSIONAL ENGINEER
03/02/26

DATE: MAR 2026

PROJECT TITLE:

PORT ARTHUR TRANSIT PARKING LOT

DRAWING TITLE:

DEMOLITION PLAN

DRAWING NUMBER: C2.01

SHEET NUMBER: 5

SHEET TOTAL: 59

SCALE: 1" = 10'

DRAWN BY: SK

CHECKED BY: KS

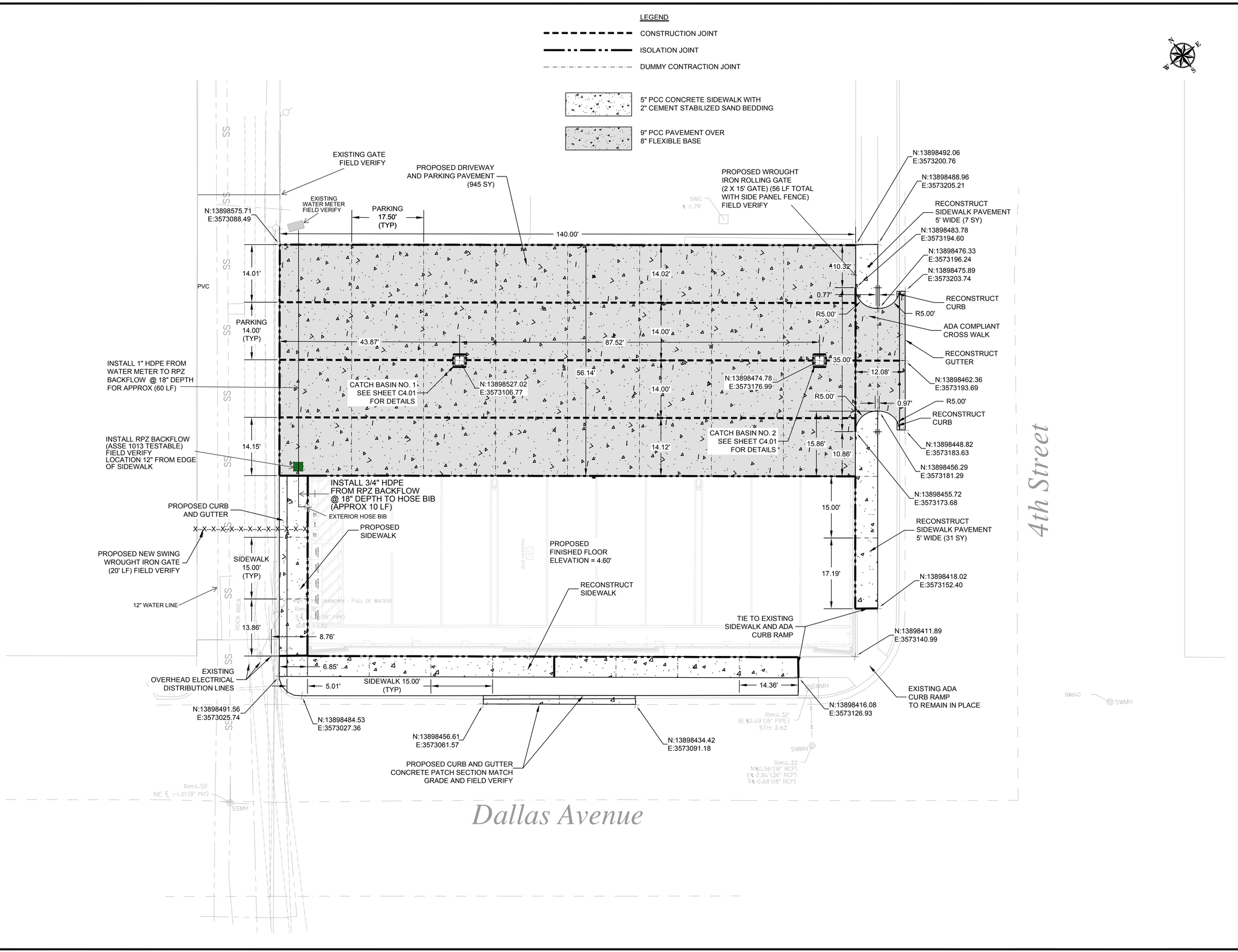

TBPE FIRM #22626

NO.	DATE	REVISION

STATE OF TEXAS
KELVIN L SOLCO
78161
LICENSED PROFESSIONAL ENGINEER
03/02/26

DATE: MAR 2026

PROJECT TITLE:

PORT ARTHUR TRANSIT PARKING LOT

DRAWING TITLE:

PAVING PLAN

DRAWING NUMBER: C3.01

SHEET NUMBER: 6

SHEET TOTAL: 57

SCALE: 1" = 10'

DRAWN BY: SK

CHECKED BY: KS

May 31, 2024 – 6:05pm
C:\The Solco Group\City of Port Arthur Transit\13. CADD – Canopy\2021-06-1087-PAT-PAVEMENT PLAN.dwg

DETAIL 1 – LINE
WATER SERVICE TO EXTERIOR HOSE BIB (CONTRACTOR GUIDANCE)
Separation from other utilities (if crossing is expected)
Warning tape and tracer wire required

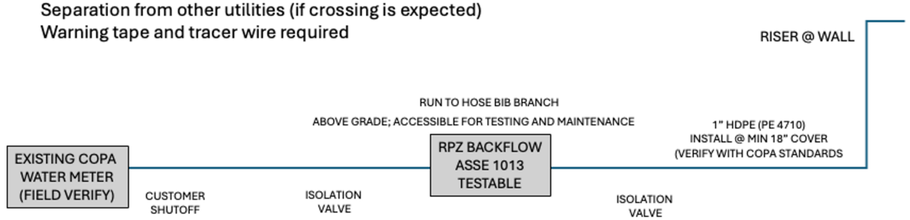

Notes:
1. Layout is schematic for contractor guidance; field verify, conditions, conflicts and City of Port Arthur (COPA) standards
2. Backflow assembly type is subject to City Cross Connection Control determination; RPZ (ASSE 1013) shown as conservative
3. RPZ must be installed above grade in a location that allows safe discharge from relief pot and access for testing
4. Provide tracer wire and warning tap for non-metallic pipe if required by COPA standard
5. Provide approve fitting for HDPE – to-brass transition; potable – water listed components
6. See Drawing C3.01 Paving Plan

City of Port Arthur Texas

TBPE FIRM #22626

NO.	DATE	REVISION

STATE OF TEXAS
KELVIN L. SOLCO
78161
LICENSED
PROFESSIONAL ENGINEER
03/02/26

THIS DOCUMENT IS RELEASED FOR THE PURPOSE OF REVIEW ONLY UNDER THE AUTHORITY OF KELVIN SOLCO, P.E. 78161 ON 01/05/2026. IT SHALL NOT BE USED FOR CONSTRUCTION, BIDDING, RECORDATION, CONVEYANCE, SALES, OR AS THE BASIS FOR ISSUANCE OF A PERMIT.

DATE: MAR 2026

PROJECT TITLE:
PORT ARTHUR TRANSIT PARKING LOT

DRAWING TITLE:
DETAIL 1- LINE
WATER SERVICE TO EXTERIOR HOSE BIB

DRAWING NUMBER:

SHEET NUMBER: 7
SHEET TOTAL: 59

SCALE: 1" = 6'

DRAWN BY: AM
CHECKED BY: KS

January 23, 2026 – 10:49am
C:\The Solco Group\City of Port Arthur Transit\13. CADD – Canopy\2021-06-1087-PAT-SURVEY PLAN.dwg

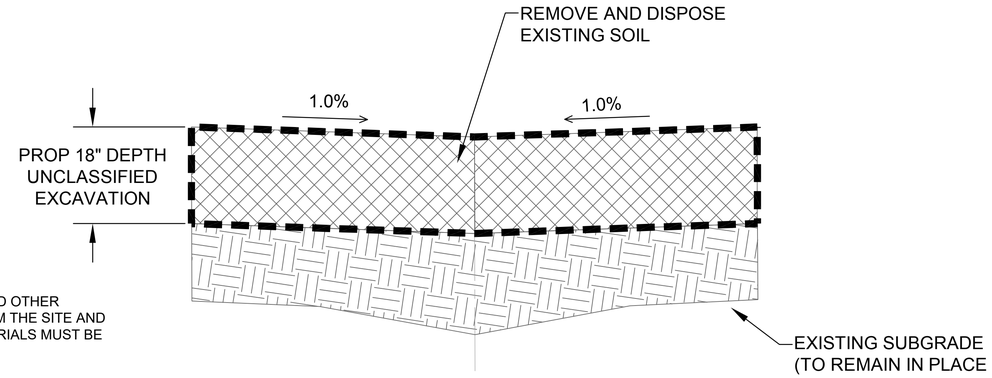

NOTE: VEGETATION, ROOTS, ORGANIC MATERIAL, SHELLS, GRAVEL, AND OTHER DELETERIOUS MATERIALS, IF ENCOUNTERED, MUST BE REMOVED FROM THE SITE AND DISPOSED. VOIDS CREATED AFTER REMOVAL OF ENCOUNTERED MATERIALS MUST BE BACKFILLED AND PROPERLY COMPACTED AS SPECIFIED.

PARKING LOT EXCAVATION SECTION

N.T.S

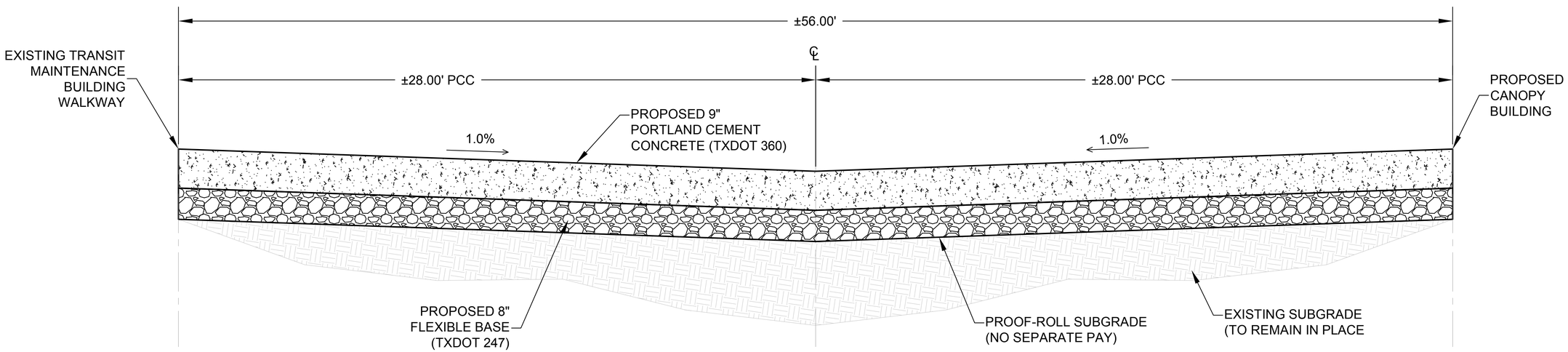

PROPOSED PARKING DRIVEWAY TYPICAL SECTION

N.T.S

PROOF ROLLING NOTE:

1. EXPOSED SUBGRADE SHALL BE PROOF ROLLED WITH A HEAVY RUBBER TIRED VEHICLE SUCH AS A PNEUMATIC-TIRE ROLLER TO DETERMINE IF LOCALIZED AREAS OF WEAK OR YIELDING MATERIALS ARE PRESENT.
2. PNEUMATIC-TIRED ROLLING SHALL HAVE FOUR OR MORE TIRES ABREAST.
3. ROLLERS SHALL WEIGH AT LEAST 25 TONS WHEN LOADED. THE MAXIMUM ACCEPTABLE LOAD IS 50 TONS.
4. PROOF ROLLED MATERIAL SHALL HAVE NO VISUAL EVIDENCE OF PUMPING, HAVE NO RUT DEPTHS MORE THAN 1-IN AND HAVE NO SOFT AREAS MORE THAN 1-IN.
5. AREAS WITH PUMPING, RUT DEPTHS AND SOFT AREAS MORE THAN 1-IN SHALL BE REMOVED AND REPLACED WITH USABLE EMBANKMENT OR FLEXIBLE BASE.
6. PROOF ROLLED MATERIAL SHALL BE STABLE AND UNIFORM.
7. NO SEPARATE PAY FOR PROOF ROLLING. PROOF ROLLING SHALL BE INCIDENTAL TO PAY ITEM TXDOT 247 FLEXIBLE BASE

DEWATERING NOTE:

NO ADDITIONAL PAYMENT SHALL BE MADE FOR DEWATERING. DEWATERING SHALL BE INCIDENTAL TO PAY ITEM TXDOT 110 - UNCLASSIFIED EXCAVATION.

City of Port Arthur Texas

TBPE FIRM #22626

NO.	DATE	REVISION

STATE OF TEXAS
KELVIN L SOLCO
78161
LICENSED
PROFESSIONAL ENGINEER
03/02/26

DATE: MAR 2026

PROJECT TITLE:

PORT ARTHUR TRANSIT PARKING LOT

DRAWING TITLE:

LOT AND DRIVEWAY TYPICAL SECTION

DRAWING NUMBER: C3.02

SHEET NUMBER: 8 SHEET TOTAL: 59

SCALE: N.T.S

DRAWN BY: SK CHECKED BY: KS

May 31, 2024 – 1:06pm
C:\The Solco Group\City of Port Arthur Transit\13. CADD – Canopy\2021-06-1087-PAT-PAVEMENT DETAILS.dwg

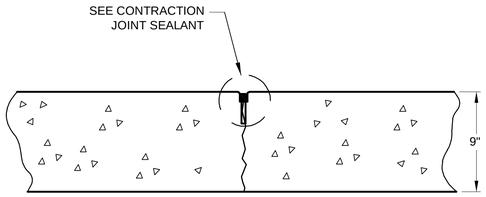

DUMMY CONTRACTION JOINT
N.T.S.

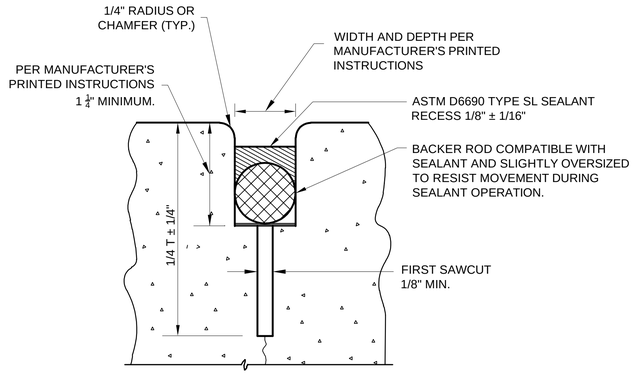

NOTE:
ALL SEALANT MATERIALS MUST BE INSTALLED IN ACCORDANCE WITH MANUFACTURER'S PRINTED INSTRUCTIONS AS APPROVED BY ENGINEER.

CONTRACTION JOINT SEALANT
N.T.S.

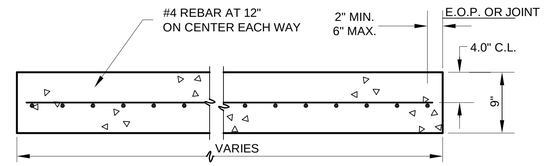

TYPICAL REINFORCED CONCRETE PAVEMENT SLAB
N.T.S.

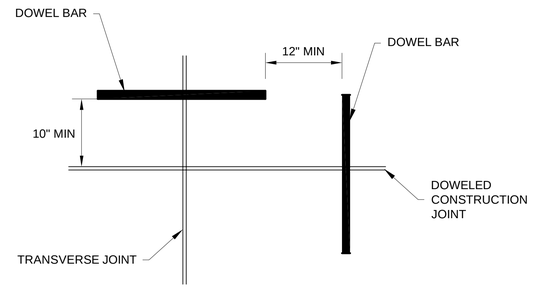

POSITION OF DOWELS AT EDGE OF JOINT
N.T.S.

SIDEWALK JOINT DETAILS:

SEE SHEET JS-14 FOR SIDEWALK JOINT SEALS DETAILS

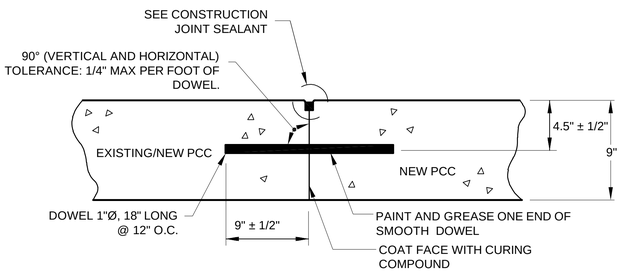

PCC DOWELED CONSTRUCTION JOINT
N.T.S.

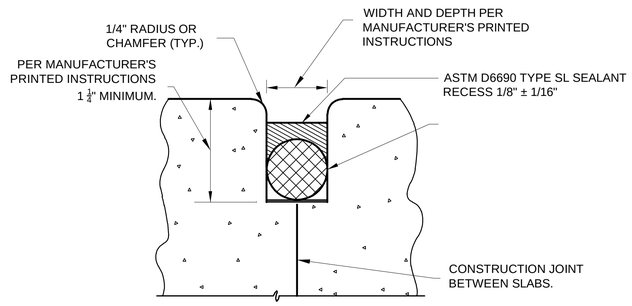

NOTE:
ALL SEALANT MATERIALS MUST BE INSTALLED IN ACCORDANCE WITH MANUFACTURER'S PRINTED INSTRUCTIONS AS APPROVED BY ENGINEER.

CONSTRUCTION JOINT SEALANT
N.T.S.

BACKER ROD COMPATIBLE WITH SEALANT AND SLIGHTLY OVERSIZED TO RESIST MOVEMENT DURING SEALANT OPERATION.

CONCRETE JOINTS NOTE:

PAYMENT FOR CONCRETE JOINTS AND SEALANT SHALL BE INCIDENTAL TO PAY ITEM TXDOT 360

SMOOTH DOWEL BAR SCHEDULE			
PCC SLAB DEPTH	DIAMETER	LENGTH	SPACING
9"	1"	18"	12"

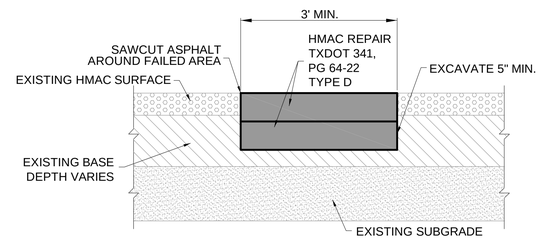

TYPICAL ASPHALT PAVEMENT PATCH REPAIR
N.T.S.

ASPHALT PAVEMENT PATCH REPAIR NOTES:

1. FAILED ASPHALT PAVEMENT AREAS DUE TO CONTRACTOR ACTIVITIES SHALL REPAIRED BY THE CONTRACTOR AT OWN COST.
2. FAILED PAVEMENT AREAS SHALL BE IDENTIFIED BY THE ENGINEER, RPR, CITY REPRESENTATIVE AND PORT REPRESENTATIVE.
3. SAWCUT ASPHALT TO FULL DEPTH AND REMOVE ASPHALT AND BASE - MIN 5" DEPTH.
4. COMPACT REMAINING BASE AND LIGHTLY PRIME EXPOSED SURFACE.
5. PLACE NEW ASPHALT (TXDOT 341) 5" DEPTH IN TWO (2) - 2.5" LIFTS AND COMPACT USING A SUITABLY SIZED STEEL DRUM VIBRATORY ROLLER.

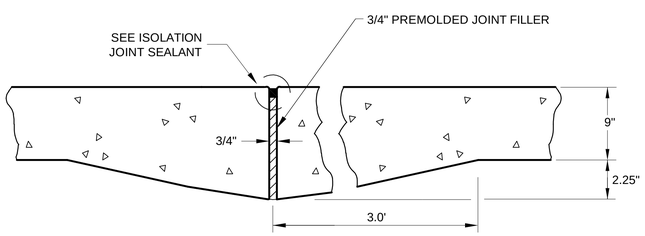

ISOLATION JOINT
N.T.S.

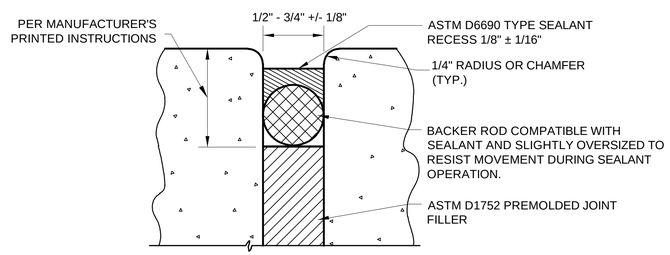

NOTE:
ALL SEALANT MATERIALS MUST BE INSTALLED IN ACCORDANCE WITH MANUFACTURER'S PRINTED INSTRUCTIONS AS APPROVED BY ENGINEER.

ISOLATION JOINT SEALANT
N.T.S.

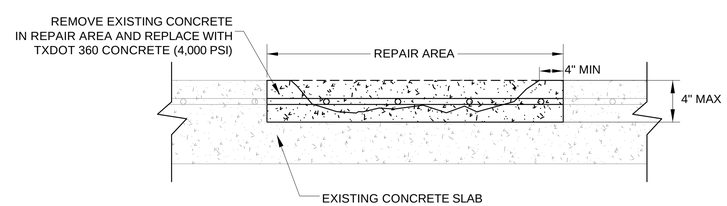

TYPICAL CONCRETE PAVEMENT PATCH REPAIR
N.T.S.

CONCRETE PAVEMENT PATCH REPAIR NOTES:

1. FAILED CONCRETE PAVEMENT AREAS DUE TO CONTRACTOR ACTIVITIES SHALL REPAIRED BY THE CONTRACTOR AT OWN COST.
2. FAILED PAVEMENT AREAS SHALL BE IDENTIFIED BY THE ENGINEER, RPR, CITY REPRESENTATIVE AND PORT REPRESENTATIVE.
3. REMOVE CONCRETE IN THE REPAIR AREA. IF REINFORCEMENT IS WITHIN THE PARTIAL-DEPTH PATCH AREA AND BOND IS DESTROYED, REMOVE ADJACENT CONCRETE AN ADDITIONAL 3/4 INCH. IF REINFORCEMENT IS DAMAGED, REMOVE AND REPLACE IN KIND. SUBMIT REINFORCEMENT PLAN TO THE ENGINEER FOR REVIEW AND APPROVAL.

City of Port Arthur Texas

TBPE FIRM #22626

NO.	DATE	REVISION

STATE OF TEXAS
KELVIN L SOLCO
78161
LICENSED PROFESSIONAL ENGINEER
03/02/26

DATE: MAR 2026

PROJECT TITLE:

PORT ARTHUR TRANSIT PARKING LOT

DRAWING TITLE:

CONCRETE PAVING DETAILS

DRAWING NUMBER: C3.03

SHEET NUMBER: 9 SHEET TOTAL: 59

SCALE: N.T.S

DRAWN BY: SK CHECKED BY: KS

January 05, 2026 – 8:53pm
C:\The Solco Group\City of Port Arthur Transit\13. CADD – Canopy\2021-06-1087-PAT-PAVEMENT DETAILS.dwg

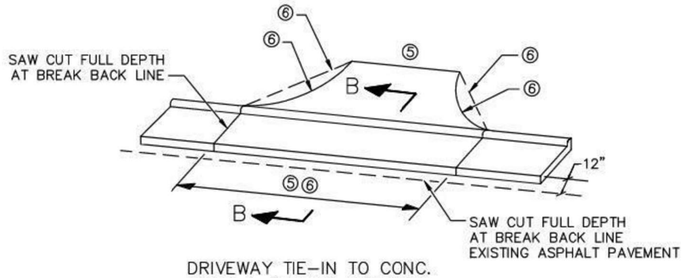

DRIVEWAY TIE–IN TO CONC.
CURB & GUTTER COMBINED

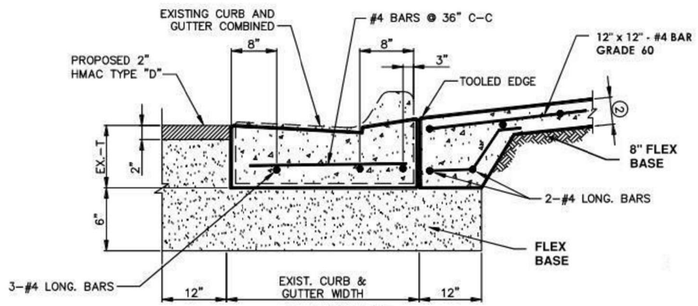

SECTION B

NOTES:

1. CLASS "A" (3,000 PSI) DRIVEWAY CONCRETE.
2. DRIVEWAY THICKNESS 9"
3. MAXIMUM SLOPE IS: 12.5% RESIDENTIAL; 8% OTHERS.
4. DRIVEWAY APPROACH RADIUS OR FLARE ENDS AT PAVEMENT TIE–INS SHALL NOT CROSS PROJECTED LONGITUDINAL PROPERTY LINES.
5. RESIDENTIAL DRIVEWAY APPROACH WIDTH SHALL BE 12' MINIMUM AND 24' MAXIMUM; COMMERCIAL DRIVEWAY WILL BE 40' (MAX.).
6. RESIDENTIAL DRIVEWAY APPROACH RADIUS AND FLARE SHALL BE 5'; COMMERCIAL DRIVEWAY APPROACH RADIUS WILL BE 25'.

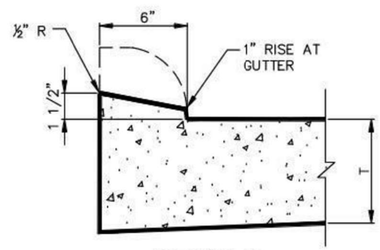

DETAIL E

MONOLITHIC LAYDOWN CURB
FOR DRIVEWAYS & ENTRANCES
NTS

Wed, 11 Dec 2019 - 9:39 am

S:\Engineering\PUBLIC WORKS\PW CONSTRUCTION DRWGS STANDARDS\City Driveway and Sidewalk Standards\DWG\Residential Driveway Details.dwg

SCALE: NOT TO SCALE DATE: 11–26–2019 FILE NAME: RESIDENTIAL DRIVEWAY DETAILS.dwg SHEET NO: 2 OF 8 DRAWN BY: AA/KB CHECKED BY: RGM	CITY OF PORT ARTHUR PUBLIC WORKS AND ENGINEERING	TITLE: RESIDENTIAL DRIVEWAY DETAILS DRIVEWAY TIE–IN TO CONCRETE CURB AND GUTTER COMBINED

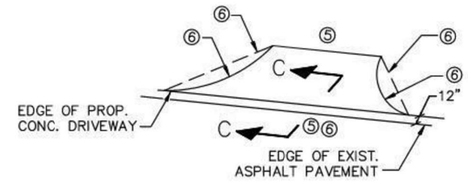

DRIVEWAY TIE–IN TO
EXISTING ASPHALT PAVEMENT

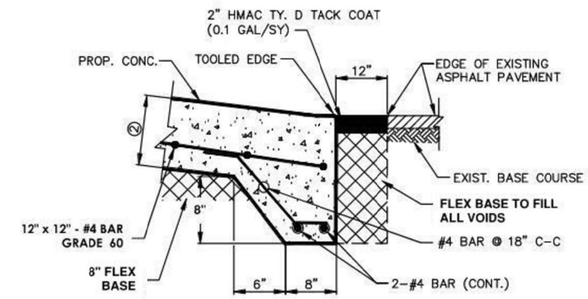

SECTION C

NOTES:

1. CLASS "A" (3,000 PSI) DRIVEWAY CONCRETE.
2. DRIVEWAY THICKNESS 9"
3. MAXIMUM SLOPE IS: 12.5% RESIDENTIAL; 8% OTHERS.
4. DRIVEWAY APPROACH RADIUS OR FLARE ENDS AT PAVEMENT TIE–INS SHALL NOT CROSS PROJECTED LONGITUDINAL PROPERTY LINES.
5. RESIDENTIAL DRIVEWAY APPROACH WIDTH SHALL BE 12' MINIMUM AND 24' MAXIMUM; COMMERCIAL DRIVEWAY WILL BE 40' (MAX.).
6. RESIDENTIAL DRIVEWAY APPROACH RADIUS AND FLARE SHALL BE 5'; COMMERCIAL DRIVEWAY APPROACH RADIUS WILL BE 25'.

Wed, 11 Dec 2019 - 9:39 am

S:\Engineering\PUBLIC WORKS\PW CONSTRUCTION DRWGS STANDARDS\City Driveway and Sidewalk Standards\DWG\Residential Driveway Details.dwg

SCALE: NOT TO SCALE DATE: 11–26–2019 FILE NAME: RESIDENTIAL DRIVEWAY DETAILS.dwg SHEET NO: 3 OF 8 DRAWN BY: AA/KB CHECKED BY: RGM	CITY OF PORT ARTHUR PUBLIC WORKS AND ENGINEERING	TITLE: RESIDENTIAL DRIVEWAY DETAILS DRIVEWAY TIE–IN TO EXISTING ASPHALT PAVEMENT

City of Port Arthur Texas

TBPE FIRM #22626

NO.	DATE	REVISION

STATE OF TEXAS
KELVIN L. SOLCO
78161
LICENSED
PROFESSIONAL ENGINEER
03/02/26

DATE: MAR 2026

PROJECT TITLE:

PORT ARTHUR TRANSIT PARKING LOT

DRAWING TITLE:

CONCRETE PAVING DETAILS

DRAWING NUMBER: C3.04

SHEET NUMBER: 10 SHEET TOTAL: 59

SCALE: N.T.S

DRAWN BY: SK CHECKED BY: KS

May 31, 2024 – 1:27pm
C:\The Solco Group\City of Port Arthur Transit\13. CADD – Canopy\2021–06–1087–PAT–PAVEMENT DETAILS.dwg

DISCLAIMER:
The use of this standard is governed by the "Texas Engineering Practice Act". No warranty of any kind is made by TxDOT for any purpose whatsoever. TxDOT assumes no responsibility for the conversion of this standard to other formats or for incorrect results or damages resulting from its use.

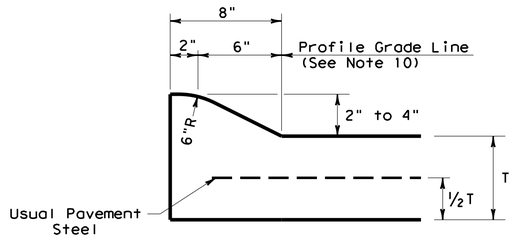

TYPE I CURB (MONOLITHIC)
2" - 4" HEIGHT

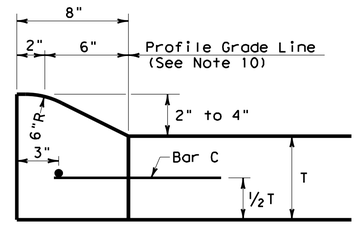

TYPE I CURB
2" - 4" HEIGHT

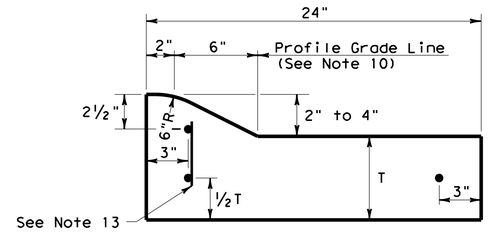

TYPE I CURB AND GUTTER
2" - 4" HEIGHT

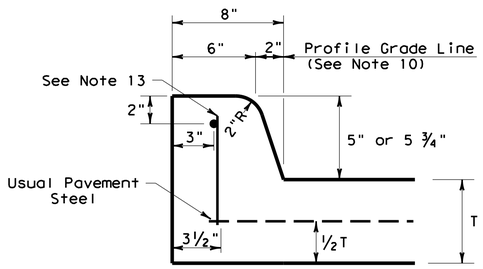

TYPE II CURB (MONOLITHIC)
5" - 5 ¾" HEIGHT

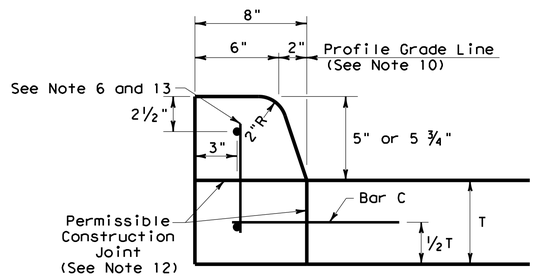

TYPE II CURB
5" - 5 ¾" HEIGHT

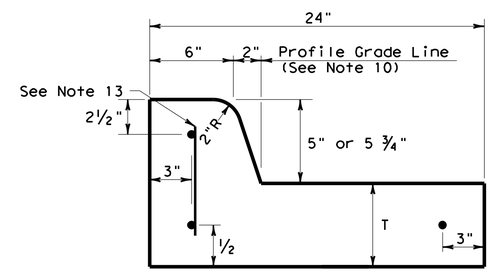

TYPE II CURB AND GUTTER
5" - 5 ¾" HEIGHT

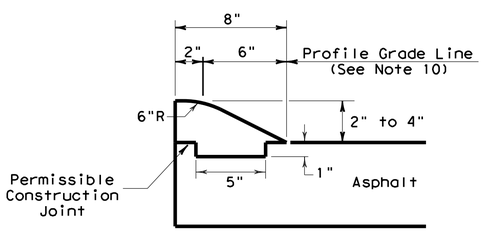

TYPE III CURB (KEYED)
2" - 4" HEIGHT

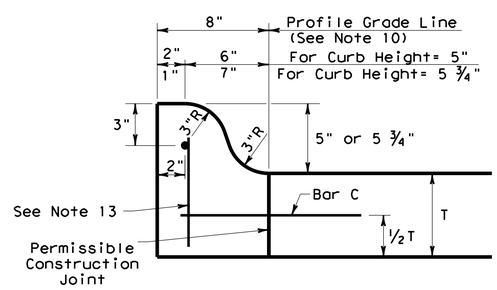

TYPE IIa CURB
5" - 5 ¾" HEIGHT

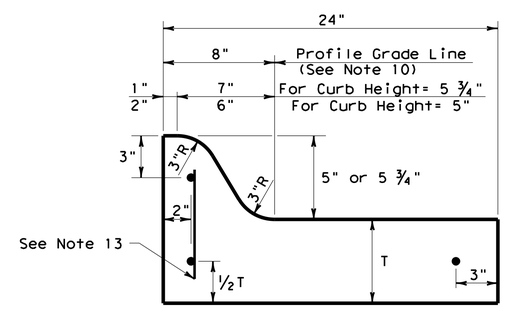

TYPE IIa CURB AND GUTTER
5" - 5 ¾" HEIGHT

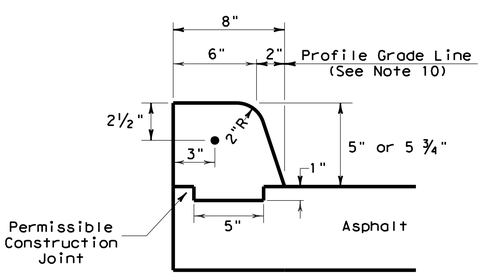

TYPE IV CURB (KEYED)
5" - 5 ¾" HEIGHT

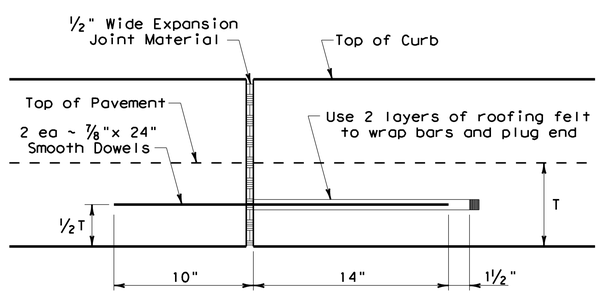

EXPANSION JOINT DETAIL

CURB TRANSITION NOTE:
Field conditions may require a longer or shorter transition, and shall be shown elsewhere in the plans, or as directed by the Engineer.

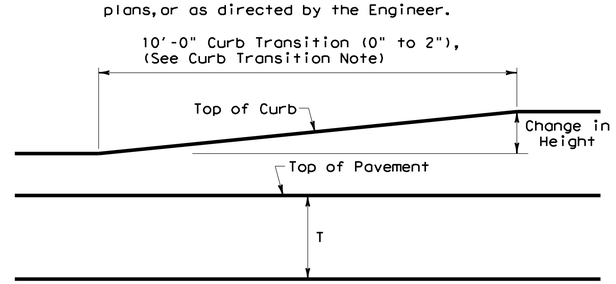

CURB TRANSITION
Note: To be paid for as Highest Curb

GENERAL NOTES

1. All materials and construction shall be in accordance with Item 529, "Concrete Curb, Gutter, and Combined Curb and Gutter."
2. Concrete shall be Class A.
3. When reinforcing bars are used, they shall be No.4 unless otherwise shown. The use of fiber reinforced concrete in lieu of reinforcing steel is acceptable. Use fibers meeting the requirements of DMS 4550, "Fibers for Concrete," and dose fibers in accordance with Material Producers List (MPL) "Fibers for Class A and B Concrete Applications."
4. Round exposed sharp edges with a rounding tool, to a minimum radius of ¼ inch.
5. All existing curbs and driveways to be removed shall be sawed or removed at existing joints.
6. Where concrete curb is to be placed on existing concrete pavement, Bar B may be drilled and grouted in place, or may be inserted into fresh concrete.
7. Expansion and contraction joints shall be constructed to match pavement joints in all curbs and curb and gutter adjacent to jointed concrete pavement. Where placement of curb or curb and gutter is not adjacent to concrete pavement, expansion joints shall be provided at structures, curb returns at streets, and at locations directed by The Engineer.
8. Vertical and horizontal dowel bars and transverse reinforcing bars shall be placed at four feet C~C.
9. Dimension 'T' shown is the thickness of concrete pavement. When curb is installed adjacent to flexible pavement dimension 'T' is 8" maximum.
10. Usual profile grade line. Refer to typical sections and plan-profile sheets for exact locations.
11. One-half inch expansion joint material shall be provided where curb or curb and gutter is adjacent to sidewalk or riprap.
12. When horizontal permissible construction joints are used, the longitudinal pavement steel shall be placed in accordance with pavement details shown elsewhere in the plans. Reinforcing steel for curb section shall then conform to that required for concrete curb.
13. Bar B placement as needed (typically at four ft. C-C) to support curb reinforcing steel during concrete placement.

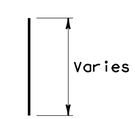

BAR B

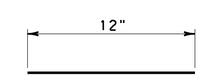

BAR C

Texas Department of Transportation

Design Division Standard

CONCRETE CURB AND CURB AND GUTTER

CCCG-22

FILE: cccg21.dgn	DN: TXDOT	CK: AN	DW: CS	CK: KM
© TxDOT: JUNE 2022	CONT	SECT	JOB	HIGHWAY
REVISIONS	DIST		COUNTY	SHEET NO.

DATE:
FILE:

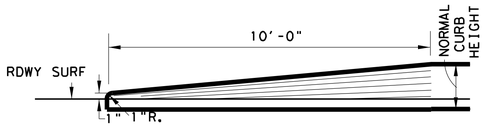

TRANSITION FOR CONCRETE CURB ENDS

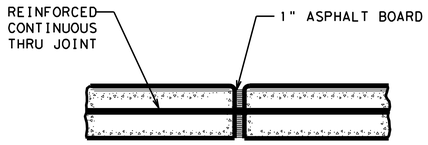

EXPANSION JOINT DETAIL

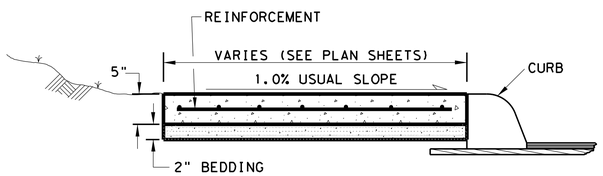

SIDEWALK & SHARED USE PATH (S.U.P.) TYP. SECT.

SIDEWALK OR S.U.P. EXPANSION JOINTS ARE TO BE AT A MAX. SPACING OF 40' AND COINCIDE WITH THE CURB EXPANSION JOINTS.

NOTE: TOOLED OR SAWED CONTRACTION JOINTS ARE NOT ALLOWED.

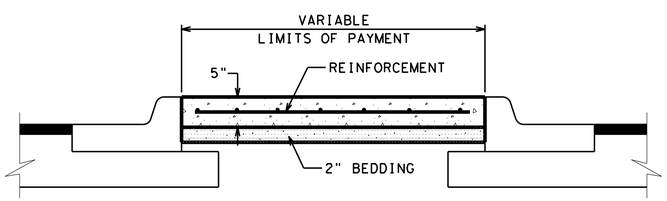

RIPRAP MEDIAN DETAIL

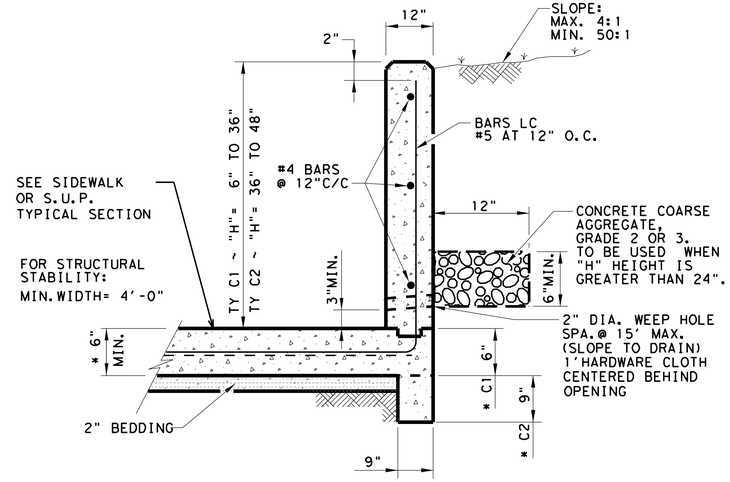

CONC CURB (TY C1) & (TY C2)

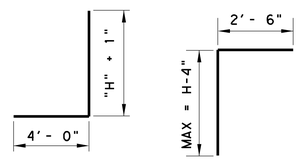

BAR LC BAR LF

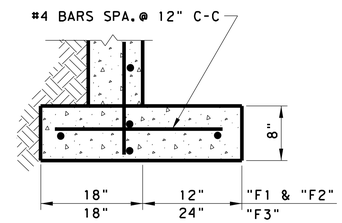

FOOTING DETAIL

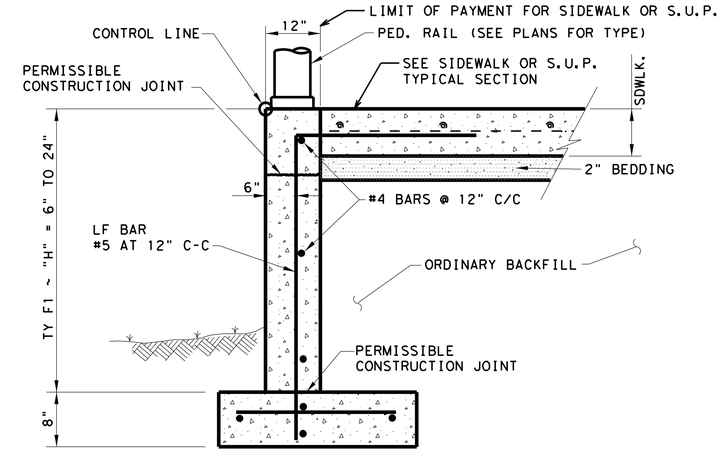

CONC CURB (TY F1)‡

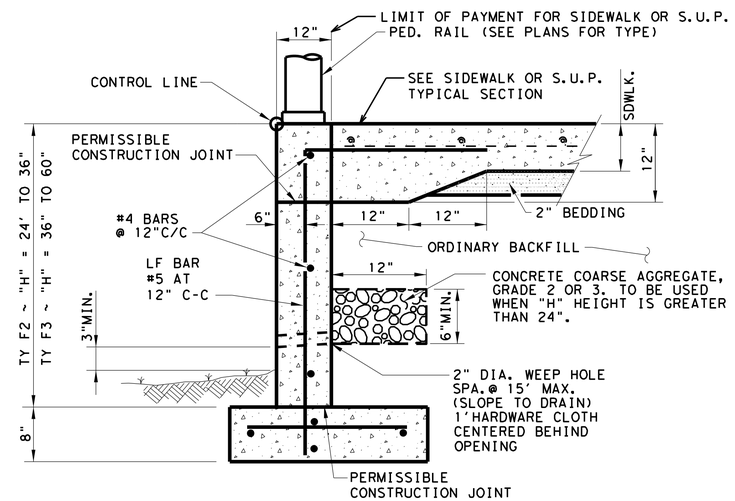

CONC CURB (TY F2) & (TY F3)‡

SIDEWALK, SHARED USE PATH, AND MEDIAN NOTES

Reinforcement will be in accordance with Item 432.3.1. Fiber reinforcement is not allowed. Class A and B Concrete are allowed to use Coarse Aggregate Grades 1-8.

Bedding may be sand, base, or RAP bedding. Furnish base meeting the requirement for any type or grade in accordance with Item 247. Base compressive strengths are waived. RAP must be 100% passing a 1 in. sieve. Bedding must be placed using ordinary compaction.

If roots are encountered verify with the Engineer prior to accommodating or removing 2 in. diameter or larger roots. Root removal must be in accordance with Item 752.4.2. Roots may remain in the bedding or base. For improvements within 6 in. of a root, the concrete thickness may be reduced by 1 in. and the bedding increased by 1 in. to minimize impacts to the roots. Adjust bedding and surface profile to provide a 1 in. bedding cushion around the roots. The surface profile may be adjusted to the extent allowed by ADA. This work is subsidiary.

CONCRETE CURB NOTES:
All Concrete, including adjacent sidewalk or S.U.P., shall be Class "C".
All Reinforcing Steel shall be Grade 60.
Minimum 4' sidewalk width for CONC CURB (TYPES C1 & C2).

‡ Until the sidewalk is complete, lateral support for the "F" curbs will be required.

ALL WORK SHOWN BEYOND TYPICAL SIDEWALK, S.U.P., AND PED RAIL IS SUBSIDIARY.

DESIGN SOIL PARAMETERS:
Soil Unit Wt.= 120 pcf
Phi = 30 Degrees
Cohesion = 50 psf
Min. PI = 15
Max. PI = 30
SURCHARGE:
TYPE F CURB q = 2' Adjacent to sidewalk
Max. slope behind TYPE C Curb = 4:1
Min. Factor of Safety against sliding is 1.5.
Designed in accordance with current AASHTO Standards and Interim Specifications.

NOT TO SCALE

Texas Department of Transportation — Austin District Standard

MISCELLANEOUS CURB, PATH, SIDEWALK, AND MEDIAN DETAILS

MCPSWMD-19 (AUS)

©TxDOT 2020

REVISIONS
04/19: APPROVED

CONT	SECT	JOB	HIGHWAY
DIST	COUNTY		SHEET NO.

DATE: 9/21/2020 12:55:01 PM
FILE: pw:\\txdot.projectwiseonline.com:TXDOT4\Documents\14 - AUS_Standards\District Design Standards\Approved\MCPSWMD-19(AUS).dgn

DISCLAIMER:
The use of this standard is governed by the "Texas Engineering Practice Act". No warranty of any kind is made by TxDOT for any purpose whatsoever. TxDOT assumes no responsibility for the conversion of this standard to other formats or for incorrect results or damages resulting from its use.

METHOD B: JOINT SEALING COMPOUND

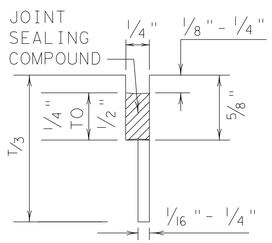

LONGITUDINAL SAWED
CONTRACTION JOINT

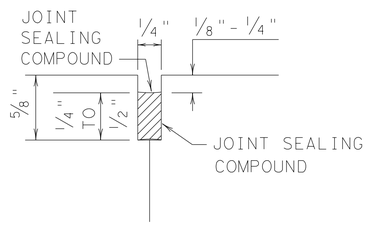

LONGITUDINAL OR TRANSVERSE
CONSTRUCTION JOINT

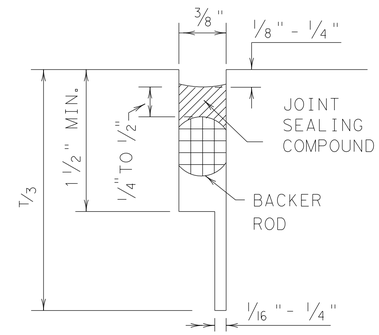

TRANSVERSE SAWED
CONTRACTION JOINT

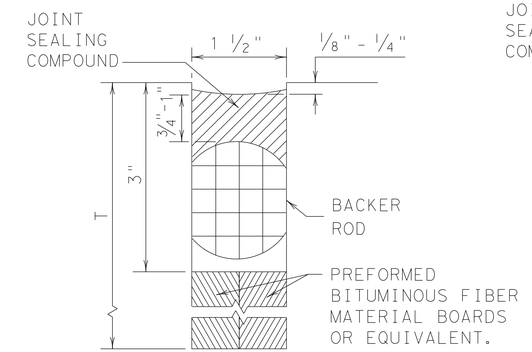

TRANSVERSE FORMED
EXPANSION JOINT

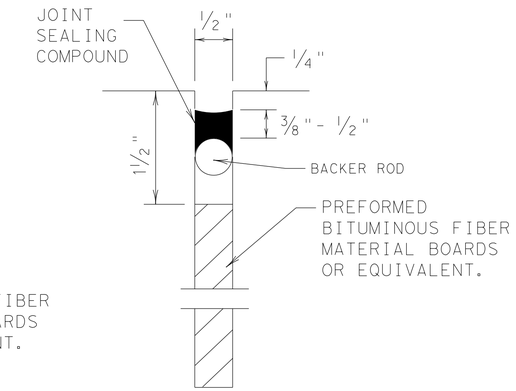

FORMED
ISOLATION JOINT

METHOD A: PREFORMED COMPRESSION SEALS (PCS)(DMS-6310 CLASS 6)

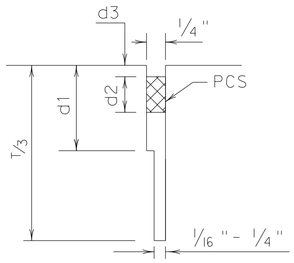

LONGITUDINAL SAWED
CONTRACTION JOINT

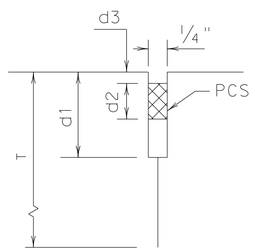

LONGITUDINAL
CONSTRUCTION JOINT

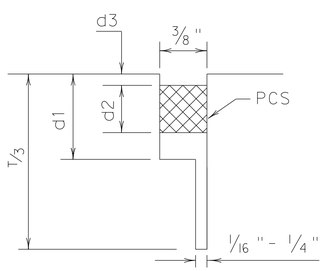

TRANSVERSE SAWED
CONTRACTION JOINT

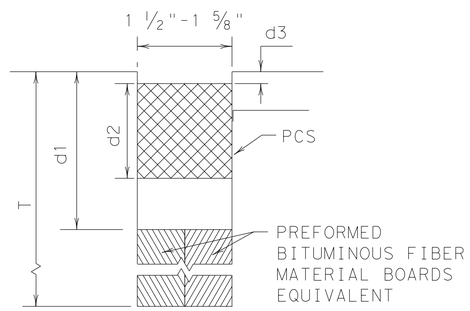

TRANSVERSE FORMED
EXPANSION JOINT

GENERAL NOTES

1. UNLESS OTHERWISE SHOWN IN THE PLANS, EITHER METHOD "A" OR METHOD "B" MAY BE USED.
2. THE LOCATION OF JOINTS SHALL BE AS SHOWN ELSEWHERE IN THE PLANS.
3. THE JOINT RESERVOIR FOR SEALANT OR PCS SHALL BE SAWED UNLESS OTHERWISE SHOWN ON THE PLANS FOR THE LONGITUDINAL AND TRANSVERSE CONSTRUCTION JOINTS AND THE SAWED JOINTS.
4. DIMENSIONS d1, d2, AND d3 SHOWN IN METHOD A SHALL BE IN ACCORDANCE WITH THE PREFORMED COMPRESSION SEAL MANUFACTURER'S RECOMMENDATION.
5. REFER TO DMS-6310 "JOINT SEALANTS AND FILLERS" FOR THE CLASSIFICATIONS.
6. FOR SAWED LONGITUDINAL JOINT, LONGITUDINAL OR TRANSVERSE CONSTRUCTION JOINT, USE JOINT SEALANT CLASS 5 OR 8 UNLESS OTHERWISE SHOWN ON THE PLAN OR APPROVED.
7. FOR TRANSVERSE SAWED CONTRACTION, TRANSVERSE FORMED EXPANSION JOINT, AND ISOLATION JOINT USE JOINT SEALANT CLASS 5 OR 8 AT NEW JOINTS. USE JOINT SEALANT CLASS 4,5,7,OR 8 FOR MAINTAINING EXISTING JOINTS.
8. THE JOINTS SHALL BE CLEANED IN ACCORDANCE WITH THE ITEM 438 "CLEANING AND SEALING JOINTS" OR ITEM 713 "CLEANING AND SEALING JOINTS AND CRACKS (CONCRETE PAVEMENT)".
9. ISOLATION JOINTS ACCOMMODATE HORIZONTAL AND VERTICAL MOVEMENTS THAT OCCUR BETWEEN A PAVEMENT AND A STRUCTURE. ISOLATION JOINTS MAY BE USED FOR BRIDGE ABUTMENTS, INTERSECTIONS, CURB AND GUTTER, OLD AND NEW PAVEMENTS, OR AROUND DRAINAGE INLETS, MANHOLES, FOOTINGS AND LIGHTING STRUCTURES.

Texas Department of Transportation | Design Division Standard

CONCRETE PAVING DETAILS

JOINT SEALS

JS-14

FILE: js14.dgn	DN: TxDOT	DN: HC	DW: HC	CK: AN
© TxDOT: DECEMBER 2014	CONT	SECT	JOB	HIGHWAY
REVISIONS				
	DIST	COUNTY		SHEET NO.

DATE:
FILE:

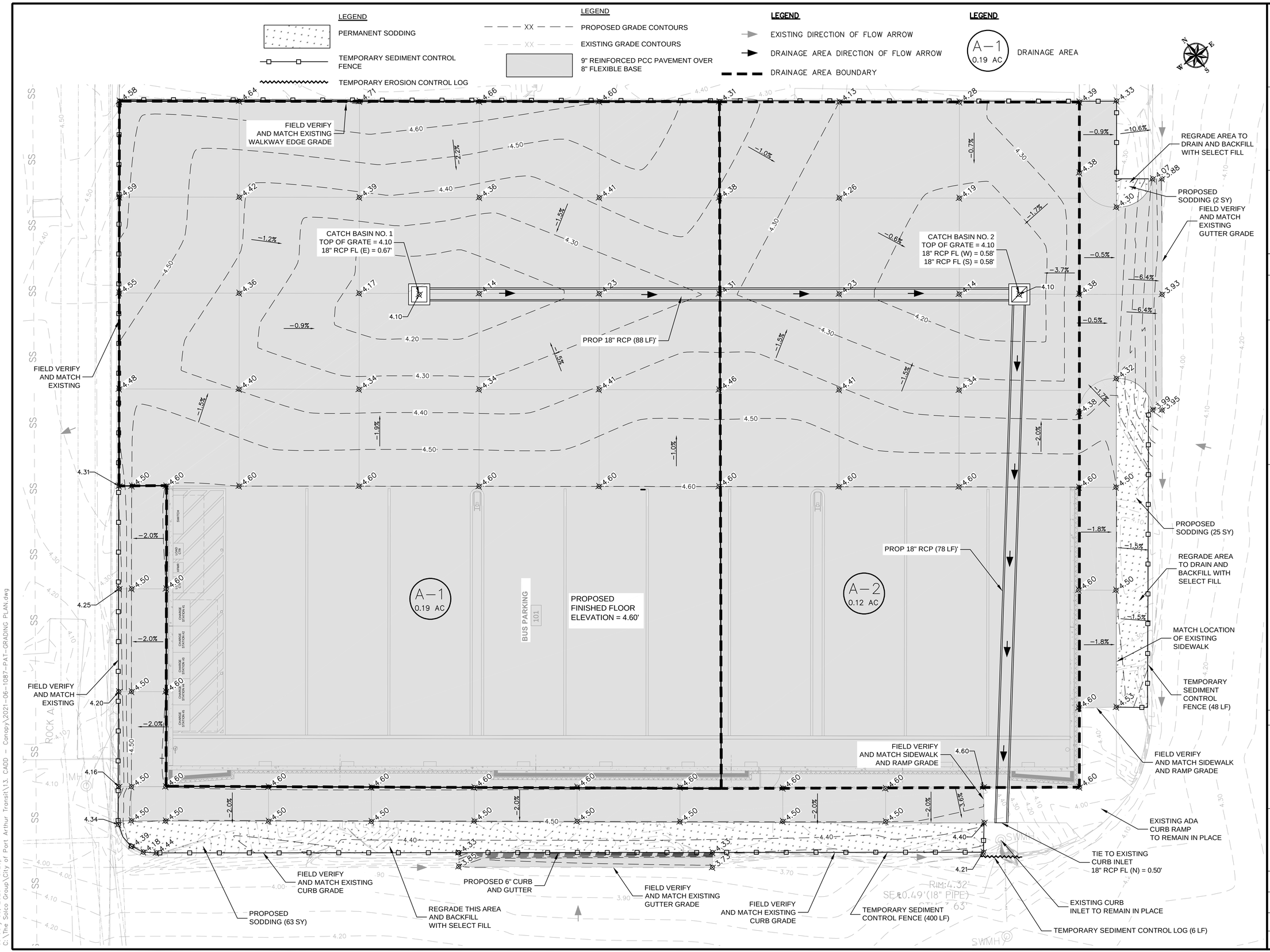

City of Port Arthur Texas

TBPE FIRM #22626

NO.	DATE	REVISION

STATE OF TEXAS
KELVIN L SOLCO
78161
LICENSED
PROFESSIONAL ENGINEER
03/02/26

DATE: MAR 2026

PROJECT TITLE:

PORT ARTHUR TRANSIT PARKING LOT

DRAWING TITLE:

GRADING, DRAINAGE AND EROSION CONTROL PLAN

DRAWING NUMBER: C4.01

SHEET NUMBER: 14 SHEET TOTAL: 59

SCALE: 1" = 6'

DRAWN BY: SK CHECKED BY: KS

January 05, 2026 – 9:20pm
C:\The Solco Group\City of Port Arthur Transit\13. CADD – Canopy\2021-06-1087-PAT-GRADING PLAN.dwg

STORM SEWER – 5 YEAR STORM DESIGN

Area (name)	INLET FROM	INLET TO	Drainage Area	Total Area (acres)	Time Con. (min)	Run off Coefficent	Sum of C*A	Intensity I in in./hr.	Runoff Q in c.f.s.	Mannings "n"	length (ft.)	# of pipe (qty)	Dia. Or Eq. Span (in.)	Rise (in.)	Grade % ft / 100 ft	Design Velocity (ft/s)	Design Capacity (cfs)
A-1	Inlet No. 1	Inlet No. 2	0.19	0.19	10.00	0.83	0.16	7.10	1.12	0.013	88	1	18		0.10	1.88	3.32
A-2	Inlet No. 2	Curb Inlet	0.12	0.31	10.00	0.83	0.26	7.20	1.85	0.013	78	1	18		0.10	1.88	3.32
		Total Area	**0.31**					Total Q in c.f.s	**1.85**							Capacity (cfs)	**3.32**

STORM SEWER – 25 YEAR STORM DESIGN

Area (name)	INLET FROM	INLET TO	Drainage Area	Total Area (acres)	Time Con. (min)	Run off Coefficent	Sum of C*A	Intensity I in in./hr.	Runoff Q in c.f.s.	Mannings "n"	length (ft.)	# of pipe (qty)	Dia. Or Eq. Span (in.)	Rise (in.)	Grade % ft / 100 ft	Design Velocity (ft/s)	Design Capacity (cfs)
A-1	Inlet No. 1	Inlet No. 2	0.19	0.19	10.00	0.91	0.17	9.75	1.69	0.013	88	1	18		0.10	1.88	3.32
A-2	Inlet No. 2	Curb Inlet	0.12	0.31	10.00	0.91	0.28	9.88	2.79	0.013	78	1	18		0.10	1.88	3.32
		Total Area	**0.31**					**Total Q in c.f.s**	**2.79**							**Capacity Q (cfs)**	**3.32**

5 YEAR AND 25 YEAR STORM NOTES:

1. CALCULATIONS BASED ON JEFFERSON COUNTY DRAINAGE DISTRICT NO. 7 (MANUAL VERSION – NOV 2019).
2. RAINFALL INTENSITY BASED ON NOAA ATLAS 14 VOL 11 VERSION 2.0 TEXAS.

City of Port Arthur Texas

TBPE FIRM #22626

NO.	DATE	REVISION

STATE OF TEXAS
KELVIN L SOLCO
78161
LICENSED
PROFESSIONAL ENGINEER
03/02/26

DATE: MAR 2026

PROJECT TITLE:

PORT ARTHUR TRANSIT PARKING LOT

DRAWING TITLE:

DRAINAGE SUMMARY

DRAWING NUMBER: C4.02

SHEET NUMBER: 15 SHEET TOTAL: 59

SCALE: N.T.S

DRAWN BY: SK CHECKED BY: KS

May 31, 2024 – 5:55pm
C:\The Solco Group\City of Port Arthur Transit\13. CADD – Canopy\2021-06-1087-PAT-DRAINAGE SUMMARY.dwg

REINFORCED CONCRETE PIPE

CONCRETE: CLASS 1 CONCRETE WITH DESIGN STRENGTH OF 4000 PSI AT 28 DAYS. UNIT IS OF MONOLITHIC CONSTRUCTION AND IS DESIGNED CONFORMING TO ASTM C-76 CLASS III, WALL B.

REINFORCEMENT: GRADE 60 REINFORCED. STEEL REBAR CONFORMING TO ASTM A185 ON REQUIRED CENTERS OR EQUAL.

NOTE: SECURE GASKET COMPLETELY AROUND TONGUE & GROOVE OF EACH JOINT OF PIPE.

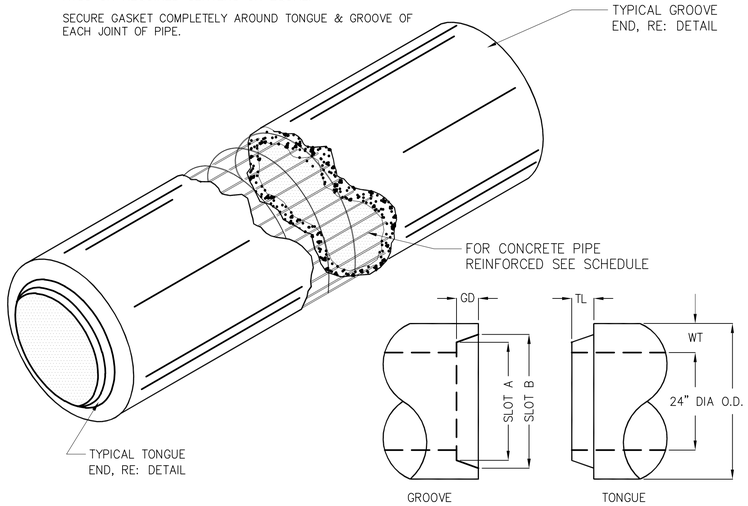

TYPICAL END DETAIL

DIMENSION SCHEDULE OF C-76 TONGUE & GROOVE PIPE										
PIPE SIZE I.D.	O.D.	WT. / FT.	LENGTHS	REINFORCEMENT	WALL THICKNESS WT	TONGUE LENGTH TL	GROOVE DEPTH GD	SLOT DIM A	SLOT DIM B	QUANTITY L.F.
18"	23"	160 LBS	4', 6', 8'	W 2.5x3.0 3"x8"	2-1/2"	2"	2-1/8"	19-3/4"	21"	

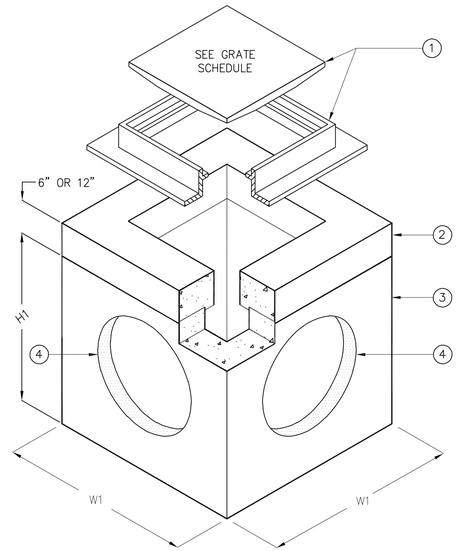

ISOMETRIC VIEW

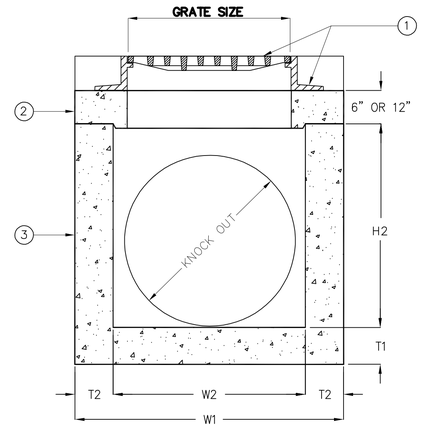

SECTION VIEW

GRATE SCHEDULE

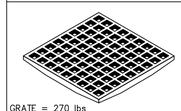

GRATE = 270 lbs
OPEN AREA = 387 in²

KEYED NOTES		
MARK	QTY	DESCRIPTION
1	1	CAST IRON FRAME & GRATE
2	1	TOP SECTION
3	1	PRECAST CONCRETE BASIN SECTION
4	4	THIN WALL KNOCKOUT ON ALL 4 SIDES, SEE KO DIMENSION FOR MAXIMUM PIPE O.D.

MODEL	W1	W2	H1	H2	T1	T2	KO	GRATE SIZE	OPEN AREA	WEIGHT LBS
CB-27	37"	25"	42"	36"	6"	6"	24"	27"x27"x2"	350	2,875

CONCRETE: CLASS I/II CONCRETE WITH OF DESIGN STRENGTH OF 4500 PSI AT 28 DAYS. UNIT IS OF MONOLITHIC CONSTRUCTION AT FLOOR AND FIRST STAGE OF WALL WITH SECTIONAL RISER TO REQUIRED DEPTH. RATED FOR H-20 LOADING.

REINFORCEMENT: GRADE 60 REINFORCED WITH STEEL REBAR TO CONFORM TO ASTM A615 ON REQUIRED CENTERS OR EQUAL.

C.I. CASTINGS: CAST IRON FRAMES AND GRATES ARE MANUFACTURED OF GREY CAST IRON CONFORMING TO ASTM A48-76 CLASS 30.

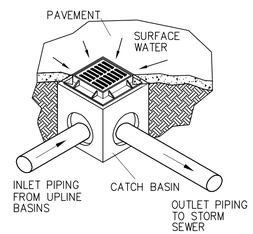

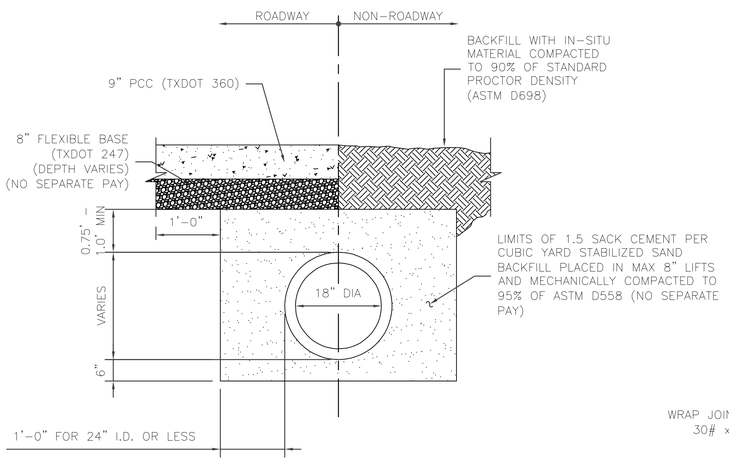

REINFORCED CONCRETE PIPE WITH SEAL SLAB

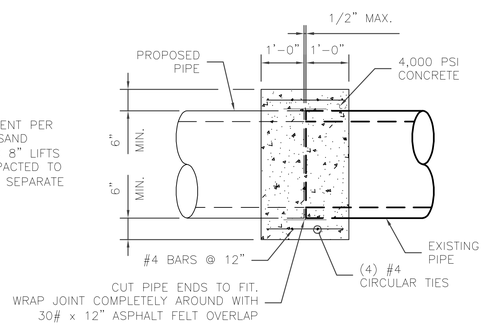

ELEVATION VIEW

TYPICAL CONCRETE COLLAR FOR 36" & SMALLER RCP

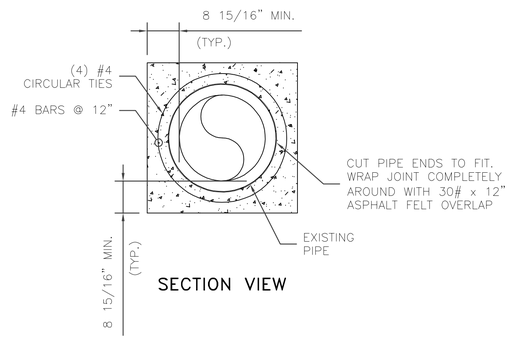

SECTION VIEW

City of Port Arthur Texas

TBPE FIRM #22626

NO.	DATE	REVISION

STATE OF TEXAS
KELVIN L SOLCO
78161
LICENSED PROFESSIONAL ENGINEER
03/02/26

DATE: MAR 2026

PROJECT TITLE:

PORT ARTHUR TRANSIT PARKING LOT

DRAWING TITLE:

DRAINAGE DETAILS

DRAWING NUMBER: C4.03

SHEET NUMBER: 16 SHEET TOTAL: 59

SCALE: N.T.S

DRAWN BY: SK CHECKED BY: KS

January 05, 2026 - 9:46pm
C:\The Solco Group\City of Port Arthur Transit\13. CADD - Canopy\2021-06-1087-PAT-DRAINAGE DETAILS.dwg

SITE DESCRIPTION

PROJECT LIMITS: CITY OF PORT ARTHUR, TX LOT AT DALLAS AVENUE AND 4TH STREET

PROJECT DESCRIPTION:

1. CONSTRUCTION OF EV BUS PARKING CANOPIES AND DRIVEWAY PROJECT.

MAJOR SOIL DISTURBING ACTIVITIES:

1. EXCAVATION FOR THE BUS PARKING AND CANOPIES FOUNDATION.

TOTAL PROJECT AREA: 0.37 ACRES

TOTAL AREA TO BE DISTURBED: 0.37 ACRES

WEIGHTED RUNOFF COEFFICIENT: (AFTER CONSTRUCTION): 0.85

EXISTING CONDITION OF SOIL & VEGETATIVE COVER AND % OF EXISTING VEGETATIVE COVER: NO CHANGE

NAME OF RECEIVING WATERS: SABINE NECHES CANAL

EROSION AND SEDIMENT CONTROLS

SOIL STABILIZATION PRACTICES:

- ____ TEMPORARY SEEDING
- X PERMANENT PLANTING, SODDING, OR SEEDING
- ____ MULCHING
- ____ SOIL RETENTION BLANKET
- ____ BUFFER ZONES
- ____ PRESERVATION OF NATURAL RESOURCES

OTHER:

STRUCTURAL PRACTICES:

- X SILT FENCES
- ____ HAY BALES
- ____ ROCK BERMS
- ____ DIVERSION, INTERCEPTOR, OR PERIMETER DIKES
- ____ DIVERSION, INTERCEPTOR, OR PERIMETER SWALES
- ____ DIVERSION DIKE AND SWALE COMBINATIONS
- ____ PIPE SLOPE DRAINS
- ____ PAVED FLUMES
- ____ ROCK BEDDING AT CONSTRUCTION EXIT
- ____ TIMBER MATTING AT CONSTRUCTION EXIT
- ____ CHANNEL LINERS
- ____ SEDIMENT TRAPS
- ____ SEDIMENT BASINS
- ____ STORM INLET SEDIMENT TRAP
- ____ STONE OUTLET STRUCTURES
- ____ CURBS AND GUTTERS
- ____ STORM SEWERS
- ____ VELOCITY CONTROL DEVICES
- X EROSION CONTROL LOGS

OTHER:

NARRATIVE – SEQUENCE OF CONSTRUCTION (STORM WATER MANAGEMENT) ACTIVITIES:

1. INSTALL BARRICADES AND TRAFFIC CONTROL DEVICES.
2. INSTALL SILT FENCE AND EROSION CONTROL LOGS.
3. SAWCUT EXISTING PAVEMENT AND UNCLASSIFIED EXCAVATION.
4. VERTICAL CONSTRUCTION OF CANOPIES AND UTILITIES.
5. CONSTRUCT PARKING AREA DRIVEWAY.
6. CONSTRUCT SIDEWALK.
7. REMOVE SILT FENCE AND EROSION CONTROL LOG.
8. REMOVE BARRICADES AND TRAFFIC CONTROL DEVICES

STORM WATER MANAGEMENT:
THERE ARE NO ACTIVITIES THAT WILL CHANGE THE DIRECTION OF STORM WATER RUNOFF.

OTHER EROSION AND SEDIMENT CONTROLS:

MAINTENANCE: ALL EROSION AND SEDIMENT CONTROLS WILL BE MAINTAINED IN GOOD WORKING ORDER. IF A REPAIR IS NECESSARY IT WILL BE DONE AT THE EARLIEST DATE POSSIBLE, BUT NO LATER THAN 7 CALENDAR DAYS AFTER THE SURROUNDING EXPOSED GROUND HAS DRIED SUFFICIENTLY TO PREVENT FURTHER DAMAGE FROM HEAVY EQUIPMENT. THE AREA ADJACENT TO CREEKS AND DRAINAGEWAYS SHALL HAVE PRIORITY FOLLOWED BY DEVICES PROTECTING STORM SEWER INLETS.

INSPECTION: ALL INSPECTIONS WILL BE PERFORMED BY THE CONTRACTOR AT LEAST EVERY 7 CALENDAR DAYS AND AFTER 0.5 INCHES OR MORE OF RAINFALL. AN INSPECTION AND MAINTENANCE REPORT SHOULD BE MADE FOR EACH INSPECTION. BASED ON THE INSPECTION RESULTS, THE CONTROLS SHALL BE REVISED ACCORDING TO THE INSPECTION REPORT.

WASTE MATERIALS: THE DUMPSTER USED TO STORE ALL WASTE MATERIAL WILL MEET ALL STATE AND LOCAL CITY SOLID WASTE MANAGEMENT REGULATIONS. ALL TRASH AND CONSTRUCTION DEBRIS WILL BE DEPOSITED IN THE DUMPSTER. THE DUMPSTER WILL BE EMPTIED AS NECESSARY OR AS REQUIRED BY LOCAL REGULATION AND THE TRASH WILL BE HAULED TO A LOCAL DUMP. NO CONSTRUCTION WASTE MATERIAL WILL BE BURIED ON SITE.

HAZARDOUS WASTE (INCLUDING SPILL REPORTING): IN THE EVENT OF A SPILL WHICH MAY BE CONSIDERED HAZARDOUS, THE OWNER AND TCEQ SHALL BE CONTACTED IMMEDIATELY.

SANITARY WASTE: ALL SANITARY WASTE WILL BE COLLECTED FROM THE PORTABLE UNITS AS NECESSARY OR AS REQUIRED BY LOCAL REGULATIONS BY A LICENSED SANITARY WASTE MANAGEMENT CONTRACTOR.

OFFSITE VEHICLE TRACKING:

- X HAUL ROADS DAMPENED FOR DUST CONTROL
- X LOADED HAUL TRUCKS TO BE COVERED WITH TARPAULIN
- X EXCESS DIRT ON ROAD REMOVED DAILY
- X STABILIZED CONSTRUCTION ENTRANCE

OTHER:

REMARKS: DISPOSAL AREAS, STOCKPILES, AND HAUL ROADS SHALL BE CONSTRUCTED IN A MANNER THAT WILL MINIMIZE AND CONTROL THE SEDIMENT THAT MAY ENTER RECEIVING WATERWAYS. DISPOSAL AREAS SHALL NOT BE LOCATED IN ANY WATERWAY, WATERBODY OR STREAMBED. CONSTRUCTION STAGING AREAS AND VEHICLE MAINTENANCE AREAS SHALL BE CONSTRUCTED BY THE CONTRACTOR IN A MANNER WHICH MINIMIZES THE RUNOFF OF ALL POLLUTANTS. ALL WATERWAYS SHALL BE CLEARED AS SOON AS PRACTICAL OF TEMPORARY EMBANKMENTS, TEMPORARY BRIDGES, MATTING, FALSEWORK, PILING, DEBRIS, AND OTHER OBSTRUCTIONS PLACED DURING CONSTRUCTION OPERATIONS THAT ARE NOT PART OF THE FINISHED WORK.

City of Port Arthur Texas

TBPE FIRM #22626

NO.	DATE	REVISION

STATE OF TEXAS
KELVIN L SOLCO
78161
LICENSED PROFESSIONAL ENGINEER
03/02/26

DATE: MAR 2026

PROJECT TITLE:

PORT ARTHUR TRANSIT PARKING LOT

DRAWING TITLE:

STORMWATER POLLUTION PREVENTION PLAN

DRAWING NUMBER: C5.01

SHEET NUMBER: 17

SHEET TOTAL: 59

SCALE: N.T.S

DRAWN BY: SK

CHECKED BY: KS

May 30, 2024 – 3:38pm
C:\The Solco Group\City of Port Arthur Transit\13. CADD – Canopy\2021-06-1087-PAT-SWPPP.dwg

DISCLAIMER:
The use of this standard is governed by the "Texas Engineering Practice Act". No warranty of any kind is made by TxDOT for any purpose whatsoever. TxDOT assumes no responsibility for the conversion of this standard to other formats or for incorrect results or damages resulting from its use.

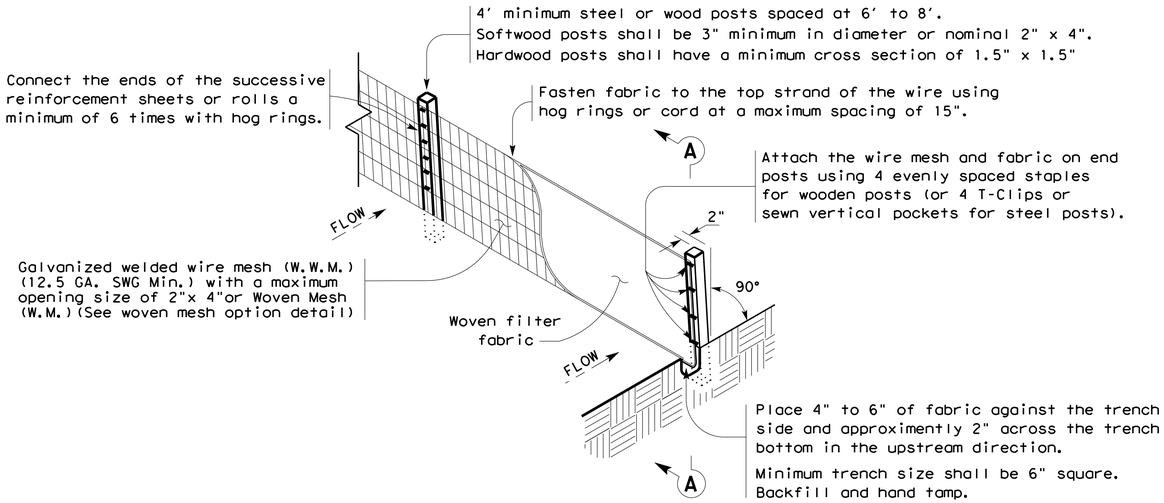

TEMPORARY SEDIMENT CONTROL FENCE

SCF

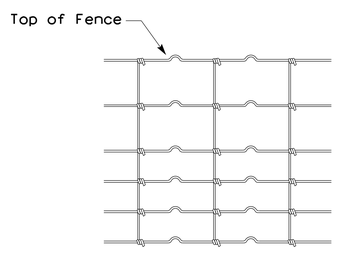

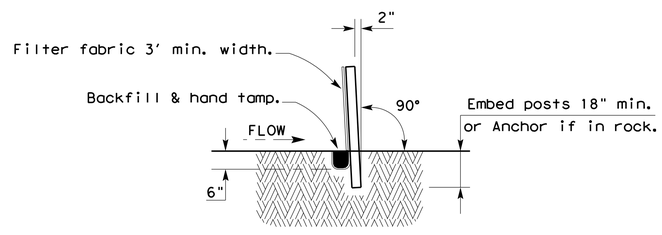

SECTION A-A

HINGE JOINT KNOT WOVEN MESH (OPTION) DETAIL

Galvanized hinge joint knot woven mesh (12.5 GA.SWG Min.) requires a minimum of five horizontal wires spaced at a maximum of 12 inches apart and all vertical wires spaced at a maximum of 12 inches apart.

SEDIMENT CONTROL FENCE USAGE GUIDELINES

A sediment control fence may be constructed near the downstream perimeter of a disturbed area along a contour to intercept sediment from overland runoff. A 2 year storm frequency may be used to calculate the flow rate to be filtered.

Sediment control fence should be sized to filter a maximum flow through rate of 100 GPM/FT^2. Sediment control fence is not recommended to control erosion from a drainage area larger than 2 acres.

LEGEND

Sediment Control Fence

SCF

GENERAL NOTES

1. Vertical tracking is required on projects where soil distributing activities have occurred unless otherwise approved.
2. Perform vertical tracking on slopes to temporarily stabilize soil.
3. Provide equipment with a track undercarriage capable of producing linear soil impressions measuring a minimum of 12" in length by 2" to 4" in width by 1/2" to 2" in depth.
4. Do not exceed 12" between track impressions.
5. Install continous linear track impressions where the minimum 12" length impressions are perpendicular to the slope or direction of water flow.

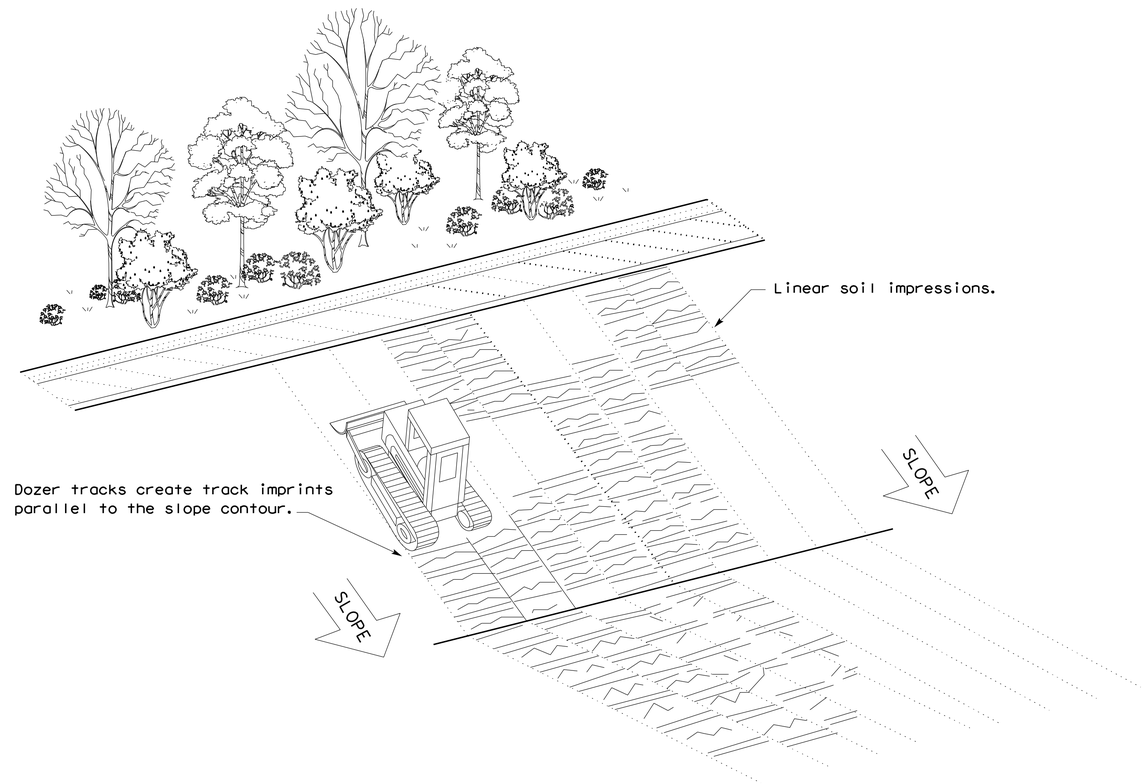

VERTICAL TRACKING

Texas Department of Transportation

Design Division Standard

TEMPORARY EROSION, SEDIMENT AND WATER POLLUTION CONTROL MEASURES

FENCE & VERTICAL TRACKING

EC(1)-16

FILE: ec116	DN: TxDOT	CK: KM	DW: VP	DN/CK: LS
© TxDOT: JULY 2016	CONT	SECT	JOB	HIGHWAY
REVISIONS				
	DIST	COUNTY		SHEET NO.

DATE
FILE

DISCLAIMER:
The use of this standard is governed by the "Texas Engineering Practice Act". No warranty of any kind is made by TxDOT for any purpose whatsoever. TxDOT assumes no responsibility for the conversion of this standard to other formats or for incorrect results or damages resulting from its use.

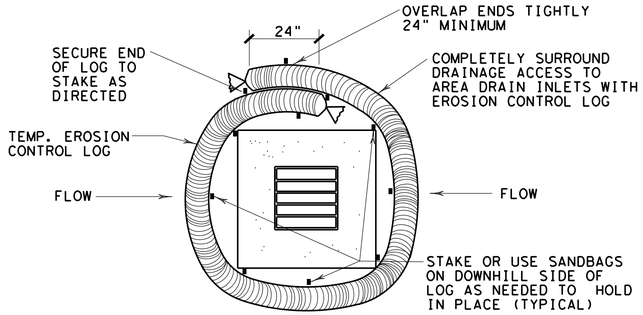

EROSION CONTROL LOG AT DROP INLET

CL-DI

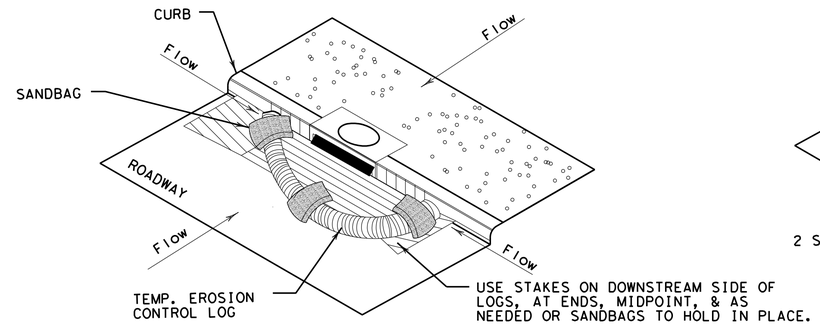

EROSION CONTROL LOG AT CURB INLET

CL-CI

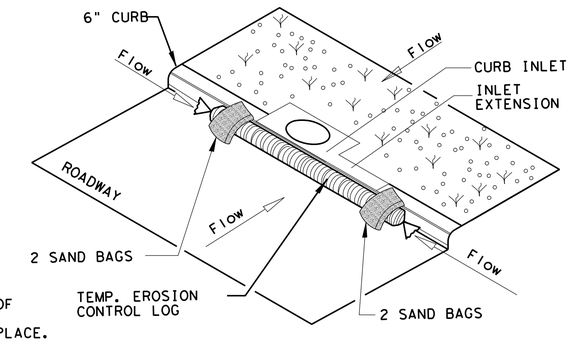

EROSION CONTROL LOG AT CURB INLET

CL-CI

NOTE:
EROSION CONTROL LOGS USED AT CURB INLETS SHOULD ONLY BE USED IF THEY WILL NOT IMPEDE TRAFFIC OR FLOOD THE ROADWAY OR WHEN THE STORM SEWER SYSTEM IS NOT FULLY FUNCTIONAL.

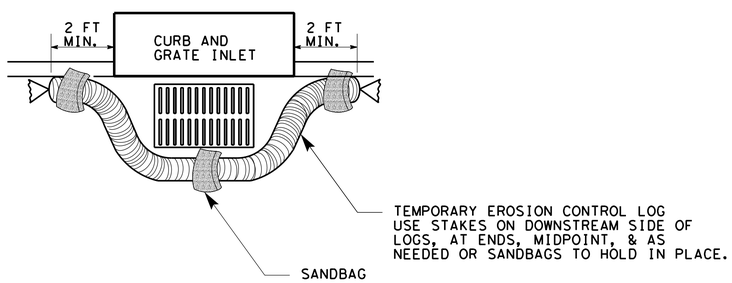

EROSION CONTROL LOG AT CURB & GRADE INLET

CL-GI

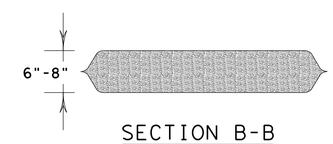

SECTION B-B

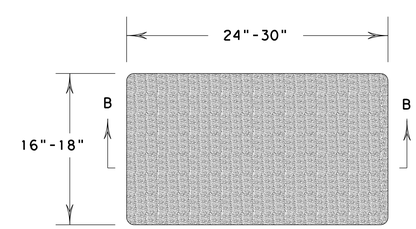

SANDBAG DETAIL

SHEET 3 OF 3

Texas Department of Transportation

Design Division Standard

TEMPORARY EROSION, SEDIMENT AND WATER POLLUTION CONTROL MEASURES

EROSION CONTROL LOG

EC(9)-16

FILE: ec916	DN: TxDOT	CK: KM	DW: LS/PT	CK: LS
© TxDOT: JULY 2016	CONT	SECT	JOB	HIGHWAY
REVISIONS				
	DIST	COUNTY		SHEET NO.

DATE:
FILE:

DISCLAIMER:
The use of this standard is governed by the "Texas Engineering Practice Act". No warranty of any kind is made by TxDOT for any purpose whatsoever. TxDOT assumes no responsibility for the conversion of this standard to other formats or for incorrect results or damages resulting from its use.

BARRICADE AND CONSTRUCTION (BC) STANDARD SHEETS GENERAL NOTES:

1. The Barricade and Construction Standard Sheets (BC sheets) are intended to show typical examples for placement of temporary traffic control devices, construction pavement markings, and typical work zone signs. The information contained in these sheets meet or exceed the requirements shown in the "Texas Manual on Uniform Traffic Control Devices" (TMUTCD).

2. The development and design of the Traffic Control Plan (TCP)is the responsibility of the Engineer.

3. The Contractor may propose changes to the TCP that are signed and sealed by a licensed professional engineer for approval. The Engineer may develop, sign and seal Contractor proposed changes.

4. The Contractor is responsible for installing and maintaining the traffic control devices as shown in the plans. The Contractor may not move or change the approximate location of any device without the approval of the Engineer.

5. Geometric design of lane shifts and detours should, when possible, meet the applicable design criteria contained in manuals such as the American Association of State Highway and Transportation Officials (AASHTO), "A Policy on Geometric Design of Highways and Streets," the TxDOT "Roadway Design Manual" or engineering judgment.

6. When projects abut, the Engineer(s) may omit the END ROAD WORK, TRAFFIC FINES DOUBLE, and other advance warning signs if the signing would be redundant and the work areas appear continuous to the motorists. If the adjacent project is completed first, the Contractor shall erect the necessary warning signs as shown on these sheets, the TCP sheets or as directed by the Engineer. The BEGIN ROAD WORK NEXT X MILES sign shall be revised to show appropriate work zone distance.

7. The Engineer may require duplicate warning signs on the median side of divided highways where median width will permit and traffic volumes justify the signing.

8. All signs shall be constructed in accordance with the details found in the "Standard Highway Sign Designs for Texas," latest edition. Sign details not shown in this manual shall be shown in the plans or the Engineer shall provide a detail to the Contractor before the sign is manufactured.

9. The temporary traffic control devices shown in the illustrations of the BC sheets are examples. As necessary, the Engineer will determine the most appropriate traffic control devices to be used.

10. Where highway construction or maintenance work is being undertaken, other than mobile operations as defined by the Texas Manual on Uniform Traffic Control Devices, CSJ limit signs are required. CSJ limit signs are shown on BC(2). The OBEY WARNING SIGNS STATE LAW sign, STAY ALERT TALK OR TEXT LATER and the WORK ZONE TRAFFIC FINES DOUBLE sign with plaque shall be erected in advance of the CSJ limits. The BEGIN ROAD WORK NEXT X MILES, CONTRACTOR and END ROAD WORK signs shall be erected at or near the CSJ limits. For mobile operations, CSJ limit signs are not required.

11. Traffic control devices should be in place only while work is actually in progress or a definite need exists.

12. The Engineer has the final decision on the location of all traffic control devices.

13. Inactive equipment and work vehicles, including workers' private vehicles must be parked away from travel lanes. They should be as close to the right-of-way line as possible, or located behind a barrier or guardrail, or as approved by the Engineer.

WORKER SAFETY NOTES:

1. Workers on foot who are exposed to traffic or to construction equipment within the right-of-way shall wear high-visibility safety apparel meeting the requirements of ISEA "American National Standard for High-Visibility Apparel," or equivalent revisions, and labeled as ANSI 107-2004 standard performance for Class 2 or 3 risk exposure. Class 3 garments should be considered for high traffic volume work areas or night time work.

2. Except in emergency situations, flagger stations shall be illuminated when flagging is used at night.

COMPLIANT WORKZONE TRAFFIC CONTROL DEVICES

1. Only pre-qualified products shall be used. The "Compliant Work Zone Traffic Control Devices List" (CWZTCD) describes pre-qualified products and their sources.

2. Work zone traffic control devices shall be compliant with the Manual for Assessing safety Hardware (MASH).

THE DOCUMENTS BELOW CAN BE FOUND ON-LINE AT http://www.txdot.gov
COMPLIANT WORK ZONE TRAFFIC CONTROL DEVICES LIST (CWZTCD)
DEPARTMENTAL MATERIAL SPECIFICATIONS (DMS)
MATERIAL PRODUCER LIST (MPL)
ROADWAY DESIGN MANUAL - SEE "MANUALS (ONLINE MANUALS)"
STANDARD HIGHWAY SIGN DESIGNS FOR TEXAS (SHSD)
TEXAS MANUAL ON UNIFORM TRAFFIC CONTROL DEVICES (TMUTCD)
TRAFFIC ENGINEERING STANDARD SHEETS

Texas Department of Transportation

Traffic Safety Division Standard

BARRICADE AND CONSTRUCTION GENERAL NOTES AND REQUIREMENTS

BC(1)-21

FILE: bc-21.dgn	DN: TxDOT	CK: TxDOT	DW: TxDOT	CK: TxDOT
© TxDOT November 2002	CONT	SECT	JOB	HIGHWAY
REVISIONS 4-03 7-13 9-07 8-14 5-10 5-21	DIST	COUNTY		SHEET NO.

DATE:
FILE:

DISCLAIMER:
The use of this standard is governed by the "Texas Engineering Practice Act". No warranty of any kind is made by TxDOT for any purpose whatsoever. TxDOT assumes no responsibility for the conversion of this standard to other formats or for incorrect results or damages resulting from its use.

GENERAL NOTES

1. For long term stationary work zones on freeways, drums shall be used as the primary channelizing device.
2. For intermediate term stationary work zones on freeways, drums should be used as the primary channelizing device but may be replaced in tangent sections by vertical panels, or 42" two-piece cones. In tangent sections, one-piece cones may be used with the approval of the Engineer but only if personnel are present on the project at all times to maintain the cones in proper position and location.
3. For short term stationary work zones on freeways, drums are the preferred channelizing device but may be replaced in tapers, transitions and tangent sections by vertical panels, two-piece cones or one-piece cones as approved by the Engineer.
4. Drums and all related items shall comply with the requirements of the current version of the "Texas Manual on Uniform Traffic Control Devices" (TMUTCD) and the "Compliant Work Zone Traffic Control Devices List" (CWZTCD).
5. Drums, bases, and related materials shall exhibit good workmanship and shall be free from objectionable marks or defects that would adversely affect their appearance or serviceability.
6. The Contractor shall have a maximum of 24 hours to replace any plastic drums identified for replacement by the Engineer/Inspector. The replacement device must be an approved device.

GENERAL DESIGN REQUIREMENTS

Pre-qualified plastic drums shall meet the following requirements:

1. Plastic drums shall be a two-piece design; the "body" of the drum shall be the top portion and the "base" shall be the bottom.
2. The body and base shall lock together in such a manner that the body separates from the base when impacted by a vehicle traveling at a speed of 20 MPH or greater but prevents accidental separation due to normal handling and/or air turbulence created by passing vehicles.
3. Plastic drums shall be constructed of lightweight flexible, and deformable materials. The Contractor shall NOT use metal drums or single piece plastic drums as channelization devices or sign supports.
4. Drums shall present a profile that is a minimum of 18 inches in width at the 36 inch height when viewed from any direction. The height of drum unit (body installed on base) shall be a minimum of 36 inches and a maximum of 42 inches.
5. The top of the drum shall have a built-in handle for easy pickup and shall be designed to drain water and not collect debris. The handle shall have a minimum of two widely spaced 9/16 inch diameter holes to allow attachment of a warning light, warning reflector unit or approved compliant sign.
6. The exterior of the drum body shall have a minimum of four alternating orange and white retroreflective circumferential stripes not less than 4 inches nor greater than 8 inches in width. Any non-reflectorized space between any two adjacent stripes shall not exceed 2 inches in width.
7. Bases shall have a maximum width of 36 inches, a maximum height of 4 inches, and a minimum of two footholds of sufficient size to allow base to be held down while separating the drum body from the base.
8. Plastic drums shall be constructed of ultra-violet stabilized, orange, high-density polyethylene (HDPE) or other approved material.
9. Drum body shall have a maximum unballasted weight of 11 lbs.
10. Drum and base shall be marked with manufacturer's name and model number.

RETROREFLECTIVE SHEETING

1. The stripes used on drums shall be constructed of sheeting meeting the color and retroreflectivity requirements of Departmental Materials Specification DMS-8300, "Sign Face Materials." Type A or Type B reflective sheeting shall be supplied unless otherwise specified in the plans.
2. The sheeting shall be suitable for use on and shall adhere to the drum surface such that, upon vehicular impact, the sheeting shall remain adhered in-place and exhibit no delaminating, cracking, or loss of retroreflectivity other than that loss due to abrasion of the sheeting surface.

BALLAST

1. Unballasted bases shall be large enough to hold up to 50 lbs. of sand. This base, when filled with the ballast material, should weigh between 35 lbs (minimum) and 50 lbs (maximum). The ballast may be sand in one to three sandbags separate from the base, sand in a sand-filled plastic base, or other ballasting devices as approved by the Engineer. Stacking of sandbags will be allowed, however height of sandbags above pavement surface may not exceed 12 inches.
2. Bases with built-in ballast shall weigh between 40 lbs. and 50 lbs. Built-in ballast can be constructed of an integral crumb rubber base or a solid rubber base.
3. Recycled truck tire sidewalls may be used for ballast on drums approved for this type of ballast on the CWZTCD list.
4. The ballast shall not be heavy objects, water, or any material that would become hazardous to motorists, pedestrians, or workers when the drum is struck by a vehicle.
5. When used in regions susceptible to freezing, drums shall have drainage holes in the bottoms so that water will not collect and freeze becoming a hazard when struck by a vehicle.
6. Ballast shall not be placed on top of drums.
7. Adhesives may be used to secure base of drums to pavement.

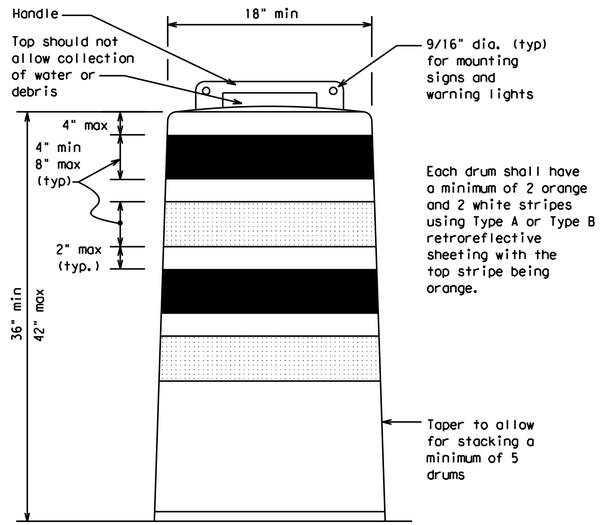

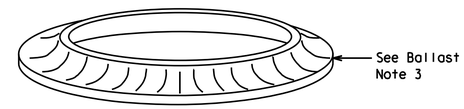

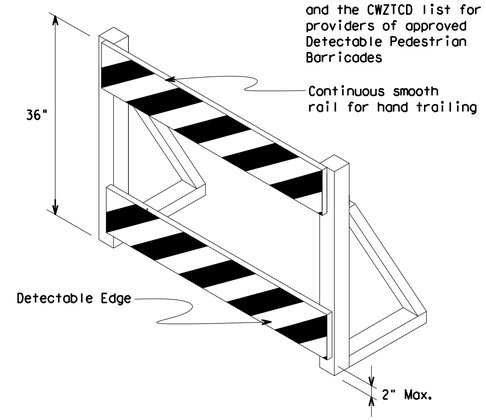

DETECTABLE PEDESTRIAN BARRICADES

1. When existing pedestrian facilities are disrupted, closed, or relocated in a TTC zone, the temporary facilities shall be detectable and include accessibility features consistent with the features present in the existing pedestrian facility. Refer to WZ(BTS-2) for Pedestrian Control requirements for Sidewalk Diversions, Sidewalk Detours and Crosswalk Closures.
2. Where pedestrians with visual disabilities normally use the closed sidewalk, a Detectable Pedestrian Barricade shall be placed across the full width of the closed sidewalk instead of a Type 3 Barricade.
3. Detectable pedestrian barricades similar to the one pictured above, longitudinal channelizing devices, some concrete barriers, and wood or chain link fencing with a continuous detectable edging can satisfactorily delineate a pedestrian path.
4. Tape, rope, or plastic chain strung between devices are not detectable, do not comply with the design standards in the "Americans with Disabilities Act Accessibility Guidelines (ADAAG)" and should not be used as a control for pedestrian movements.
5. Warning lights shall not be attached to detectable pedestrian barricades.
6. Detectable pedestrian barricades should use 8" nominal barricade rails as shown on BC(10) provided that the top rail provides a smooth continuous rail suitable for hand trailing with no splinters, burrs, or sharp edges.

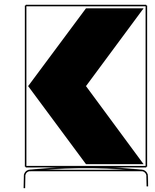

18" x 24" Sign
(Maximum Sign Dimension)
Chevron CW1-8, Opposing Traffic Lane Divider, Driveway sign D70a, Keep Right R4 series or other signs as approved by Engineer

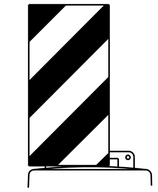

12" x 24"
Vertical Panel
mount with diagonals sloping down towards travel way

Plywood, Aluminum or Metal sign substrates shall NOT be used on plastic drums

SIGNS, CHEVRONS, AND VERTICAL PANELS MOUNTED ON PLASTIC DRUMS

1. Signs used on plastic drums shall be manufactured using substrates listed on the CWZTCD.
2. Chevrons and other work zone signs with an orange background shall be manufactured with Type B_{FL} or Type C_{FL} Orange sheeting meeting the color and retroreflectivity requirements of DMS-8300, "Sign Face Material," unless otherwise specified in the plans.
3. Vertical Panels shall be manufactured with orange and white sheeting meeting the requirements of DMS-8300 Type A or Type B. Diagonal stripes on Vertical Panels shall slope down toward the intended traveled lane.
4. Other sign messages (text or symbolic) may be used as approved by the Engineer. Sign dimensions shall not exceed 18 inches in width or 24 inches in height, except for the R9 series signs discussed in note 8 below.
5. Signs shall be installed using a 1/2 inch bolt (nominal) and nut, two washers, and one locking washer for each connection.
6. Mounting bolts and nuts shall be fully engaged and adequately torqued. Bolts should not extend more than 1/2 inch beyond nuts.
7. Chevrons may be placed on drums on the outside of curves, on merging tapers or on shifting tapers. When used in these locations, they may be placed on every drum or spaced not more than on every third drum. A minimum of three (3) should be used at each location called for in the plans.
8. R9-9, R9-10, R9-11 and R9-11a Sidewalk Closed signs which are 24 inches wide may be mounted on plastic drums, with approval of the Engineer.

Texas Department of Transportation — Traffic Safety Division Standard

BARRICADE AND CONSTRUCTION CHANNELIZING DEVICES

BC(8)-21

FILE: bc-21.dgn	DN: TxDOT	CK: TxDOT	DW: TxDOT	CK: TxDOT
©TxDOT November 2002	CONT	SECT	JOB	HIGHWAY
REVISIONS 4-03 8-14, 9-07 5-21, 7-13	DIST		COUNTY	SHEET NO.

DATE:
FILE:

DISCLAIMER:
The use of this standard is governed by the "Texas Engineering Practice Act". No warranty of any kind is made by TxDOT for any purpose whatsoever. TxDOT assumes no responsibility for the conversion of this standard to other formats or for incorrect results or damages resulting from its use.

TYPE 3 BARRICADES

1. Refer to the Compliant Work Zone Traffic Control Devices List (CWZTCD) for details of the Type 3 Barricades and a list of all materials used in the construction of Type 3 Barricades.
2. Type 3 Barricades shall be used at each end of construction projects closed to all traffic.
3. Barricades extending across a roadway should have stripes that slope downward in the direction toward which traffic must turn in detouring. When both right and left turns are provided, the chevron striping may slope downward in both directions from the center of the barricade. Where no turns are provided at a closed road, striping should slope downward in both directions toward the center of roadway.
4. Striping of rails, for the right side of the roadway, should slope downward to the left. For the left side of the roadway, striping should slope downward to the right.
5. Identification markings may be shown only on the back of the barricade rails. The maximum height of letters and/or company logos used for identification shall be 1".
6. Barricades shall not be placed parallel to traffic unless an adequate clear zone is provided.
7. Warning lights shall NOT be installed on barricades.
8. Where barricades require the use of weights to keep from turning over, the use of sandbags with dry, cohesionless sand is recommended. The sandbags will be tied shut to keep the sand from spilling and to maintain a constant weight. Sand bags shall not be stacked in a manner that covers any portion of a barricade rails reflective sheeting. Rock, concrete, iron, steel or other solid objects will NOT be permitted. Sandbags should weigh a minimum of 35 lbs and a maximum of 50 lbs. Sandbags shall be made of a durable material that tears upon vehicular impact. Rubber (such as tire inner tubes) shall not be used for sandbags. Sandbags shall only be placed along or upon the base supports of the device and shall not be suspended above ground level or hung with rope, wire, chains or other fasteners.
9. Sheeting for barricades shall be retroreflective Type A or Type B conforming to Departmental Material Specification DMS-8300 unless otherwise noted.

Barricades shall NOT be used as a sign support.

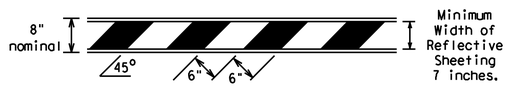

TYPICAL STRIPING DETAIL FOR BARRICADE RAIL

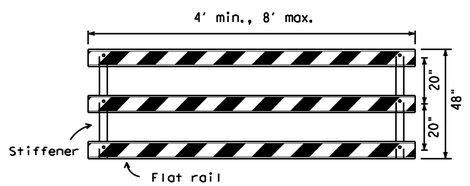

Stiffener may be inside or outside of support, but no more than 2 stiffeners shall be allowed on one barricade.

TYPICAL PANEL DETAIL FOR SKID OR POST TYPE BARRICADES

Each roadway of a divided highway shall be barricaded in the same manner.

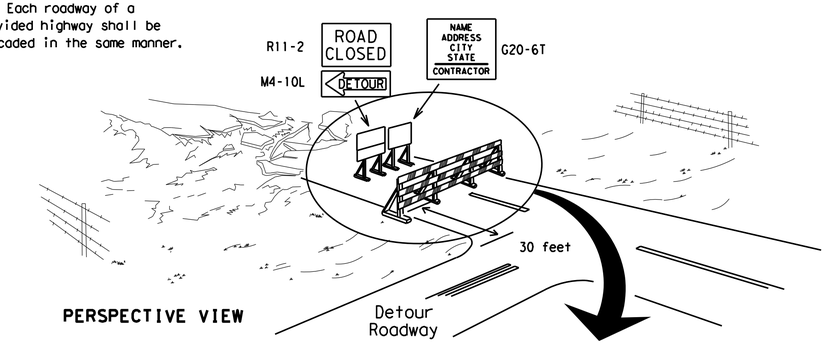

PERSPECTIVE VIEW

The three rails on Type 3 barricades shall be reflectorized orange and reflective white stripes on one side facing one-way traffic and both sides for two-way traffic.
Barricade striping should slant downward in the direction of detour.

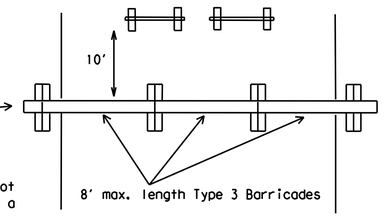

PLAN VIEW

1. Signs should be mounted on independent supports at a 7 foot mounting height in center of roadway. The signs should be a minimum of 10 feet behind Type 3 Barricades.
2. Advance signing shall be as specified elsewhere in the plans.

TYPE 3 BARRICADE (POST AND SKID) TYPICAL APPLICATION

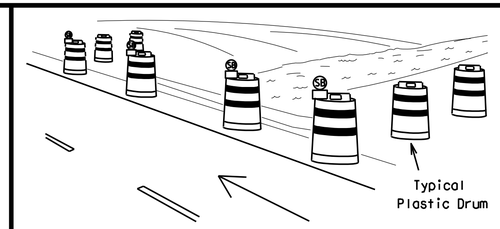

PERSPECTIVE VIEW

1. Where positive redirectional capability is provided, drums may be omitted.
2. Plastic construction fencing may be used with drums for safety as required in the plans.
3. Vertical Panels on flexible support may be substituted for drums when the shoulder width is less than 4 feet.
4. When the shoulder width is greater than 12 feet, steady-burn lights may be omitted if drums are used.
5. Drums must extend the length of the culvert widening.

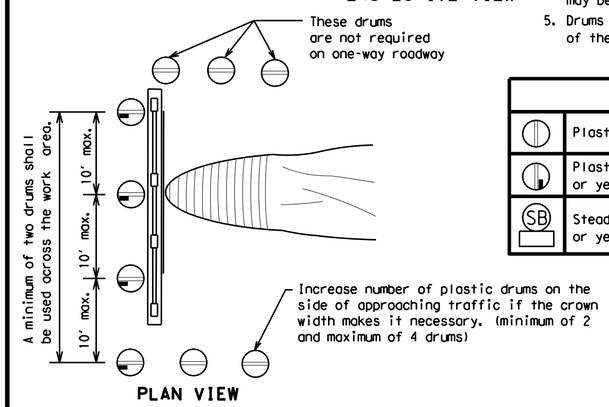

PLAN VIEW

LEGEND	
	Plastic drum
	Plastic drum with steady burn light or yellow warning reflector
SB	Steady burn warning light or yellow warning reflector

CULVERT WIDENING OR OTHER ISOLATED WORK WITHIN THE PROJECT LIMITS

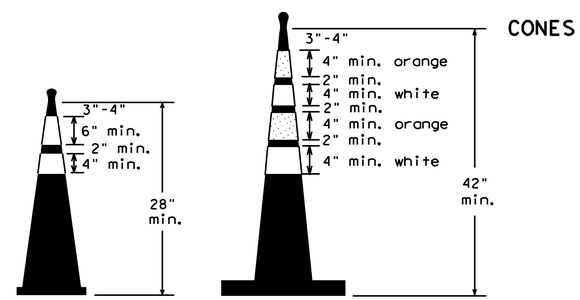

Two-Piece cones

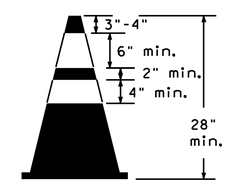

One-Piece cones

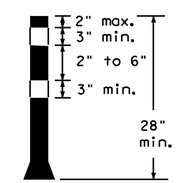

Tubular Marker

28" Cones shall have a minimum weight of 9 1/2 lbs.

42" 2-piece cones shall have a minimum weight of 30 lbs. including base.

1. Traffic cones and tubular markers shall be predominantly orange, and meet the height and weight requirements shown above.
2. One-piece cones have the body and base of the cone molded in one consolidated unit. Two-piece cones have a cone shaped body and a separate rubber base, or ballast, that is added to keep the device upright and in place.
3. Two-piece cones may have a handle or loop extending up to 8" above the minimum height shown, in order to aid in retrieving the device.
4. Cones or tubular markers shall have white or white and orange reflective bands as shown above. The reflective bands shall have a smooth, sealed outer surface and meet the requirements of Departmental Material Specification DMS-8300 Type A or Type B.
5. 28" cones and tubular markers are generally suitable for short duration and short-term stationary work as defined on BC(4). These should not be used for intermediate-term or long-term stationary work unless personnel is on-site to maintain them in their proper upright position.
6. 42" two-piece cones, vertical panels or drums are suitable for all work zone durations.
7. Cones or tubular markers used on each project should be of the same size and shape.

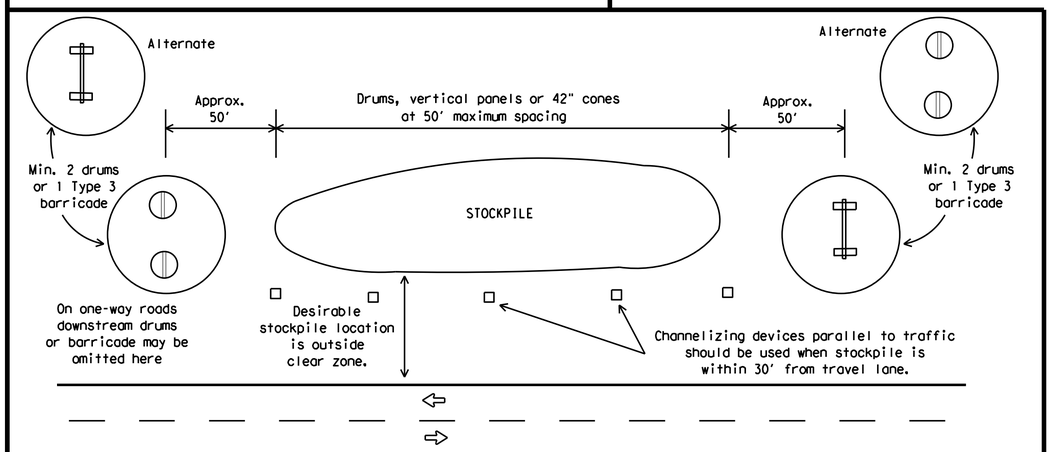

TRAFFIC CONTROL FOR MATERIAL STOCKPILES

SHEET 10 OF 12

Texas Department of Transportation — Traffic Safety Division Standard

BARRICADE AND CONSTRUCTION CHANNELIZING DEVICES

BC(10)-21

FILE: bc-21.dgn	DN: TxDOT	CK: TxDOT	DW: TxDOT	CK: TxDOT
© TxDOT November 2002	CONT	SECT	JOB	HIGHWAY
REVISIONS 9-07 8-14, 7-13 5-21	DIST		COUNTY	SHEET NO.

DATE:
FILE:

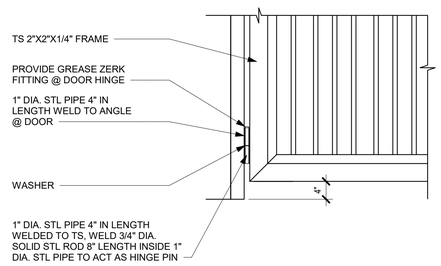

GATE DETAIL

3/4" = 1'0"

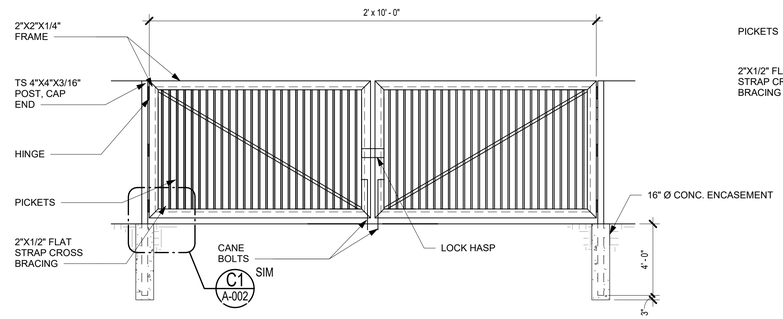

MANUAL SWING GATE ELEVATION AT ALLEY

¼" = 1'0"

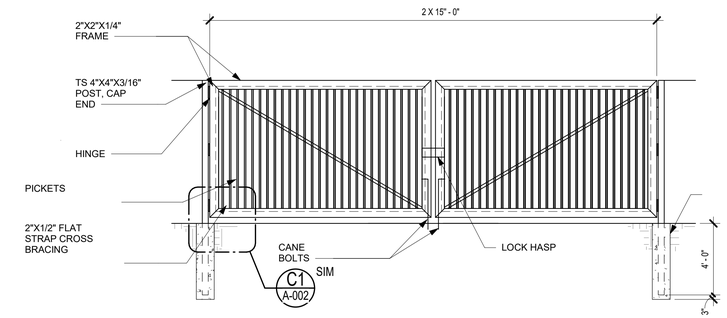

MANUAL ROLLING GATE ELEVATION AT DRIVEWAY

¼" = 1'0"

NOTE: FENCE SHALL BE STRAIGHT, LEVEL, (UNIFORMLY STEPPED TO MATCH GRADE), AND FREE OF SAG, BOWING, OR MISALIGNMENT. PANELS SHALL BE EVENLY SPACED. MINIMIZE FIELD CUTS IF POSSIBLE. ANY FIELD CUTS, WELDS, OR COATING DAMAGE SHALL BE REPAIRED IMMEDIATELY TO PREVENT CORROSION. GATES SHALL OPERATE FREELY. GATES MUST HAVE HEAVY-DUTY HINGES, POSITIVE LATCH MECHANISMS, AND DROP RODS WHERE REQUIRED. CORE DRILL HOLE(S) FOR DROP ROD(S) (NO HAMMER DRILLING) INSTALL PVC OR STELL SLEEVE. USE NON-SHRINK GROUT AROUND THE SLEEVE. GRIND FLUSH IF NECESSARY. NO EXPOSED ROUGH EDGES PERMITTED.

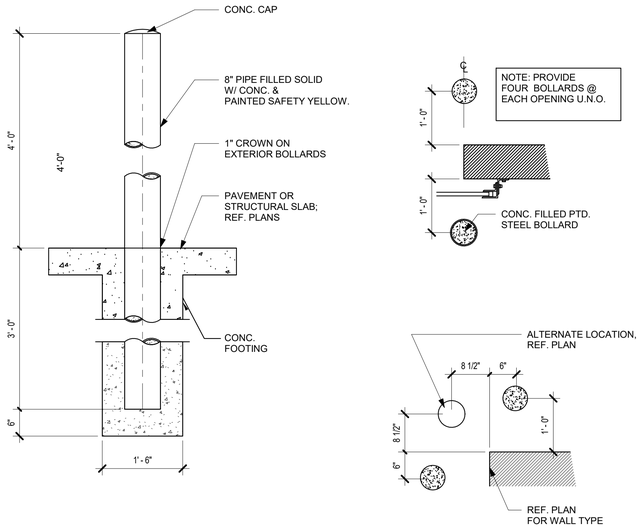

BOLLARD DETAIL

3/4" = 1'0"

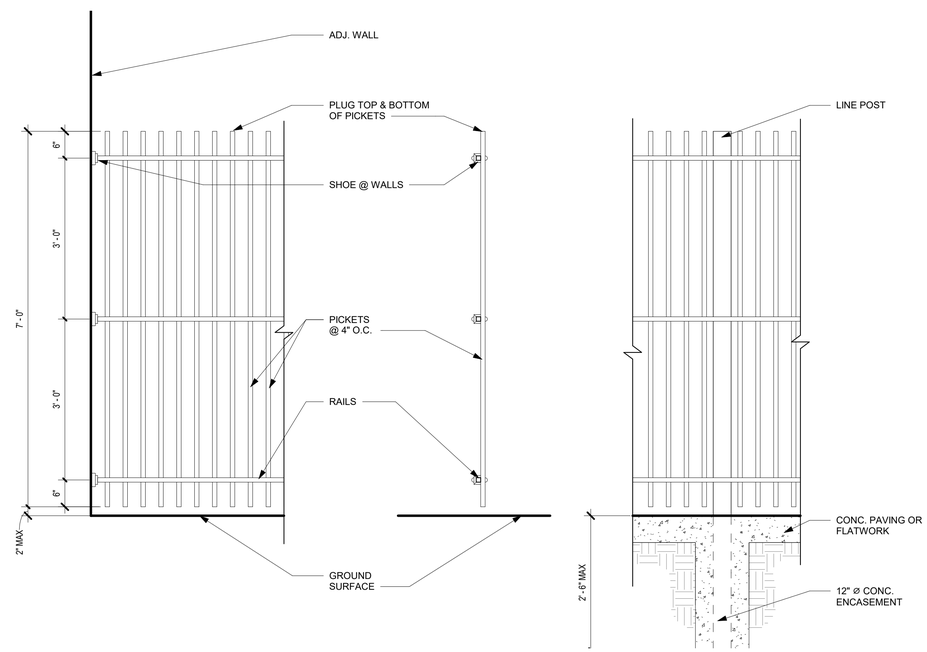

FENCE DETAIL

3/4" = 1'0"

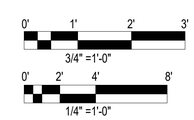

NOTES:

1. MATCH FENCE IN STYLE AND COLOR
2. SUBMITTAL REQUIRED TO ENGINEER
3. FIELD VERIFY EXISTING FENCE TO REMOVE AND REPLACE
4. FIELD VERIFY FINAL LOCATION OF PROPOSED NEW MANUAL ROLLING GATE AT DRIVEWAY

City of Port Arthur Texas

TBPE FIRM #22606

NO.	DATE	REVISION

STATE OF TEXAS
KELVIN L. SOLCO
78161
LICENSED PROFESSIONAL ENGINEER
03/02/26

DATE: MAR 2026

PROJECT TITLE:

PORT ARTHUR TRANSIT PARKING LOT

DRAWING TITLE:

FENCING DETAILS

DRAWING NUMBER: C6.01

SHEET NUMBER: 23

SHEET TOTAL: 59

SCALE: 1" = 6'

DRAWN BY: AM

CHECKED BY: KS

LIFE SAFETY REVIEW

APPLICABLE CODES:

2015 INTERNATIONAL FIRE CODE (IFC)
2012 INTERNATIONAL BUILDING CODE (IBC)
2012 TEXAS ACCESSIBILITY STANDARDS (TAS)
2015 INTERNATIONAL MECHANICAL CODE (IMC)
2015 INTERNATIONAL PLUMBING CODE (IPC)
2014 NATIONAL ELECTRIC CODE (NEC)

PROJECT DESCRIPTION:	BUILDING USE: ORDINARY HAZARD. AREA: S-2 (OPEN PARKING STRUCTURE) 5,517 SF TOTAL BUILDING AREA: 5,517 GROSS SF NUMBER OF STORIES: 1 AND NON SPRINKLED
CODE CATEGORY:	IBC
BUILDING CLASSIFICATION:	*(Chapter 16)* CATEGORY: II SEISMIC IMPORTANCE FACTOR: 1.0 GROUND SNOW LOAD: GROUND SNOW LOAD 0 PSF WIND DESIGN SPEED: 160 MPH
OCCUPANCY CLASSIFICATION:	*(Chapter 3, Section 306.1)* STORAGE (S2) OCCUPANCY
HAZARD CLASSIFICATION:	ORDINARY HAZARD
CONSTRUCTION TYPE:	*(Table 601)* TYPE IIB
ALLOWABLE HEIGHT & AREAS:	*(Table 503)* 16,000 SF BY TABLE 503 55' (3 STORIES) BY TABLE
PORTABLE EXTINGUISHING REQUIREMENTS:	*(SECTION 906.1)* GROUP S-2 FOR CLASS B FIRE HAZARDS (MODERATE HAZARD) PROVIDE IN ACCORDANCE WITH NFPA 10 AND 906.3.2. PROVIDE PORTABLE EXTINGUISHERS WITH MINIMUM RATING 20-B WITH MAXIMUM TRAVEL DISTANCE TO EXTINGUISHERS OF 50'-0". AS INDICATED.

KSA

1111 Hawn Avenue
Shreveport, LA 71107
T.318.221.7501 F.318.221.7635
www.ksaeng.com
TBPE Firm Registration No. F-1356

01.06.2026

MI.2289

COPYRIGHT

ALL REPORTS, PLANS, SPECIFICATIONS, COMPUTER FILES, FIELD DATA, NOTES AND OTHER DOCUMENTS AND ANY INSTRUMENTS PREPARED BY KSA, AS INSTRUMENTS OF SERVICE SHALL REMAIN THE PROPERTY OF KSA. KSA SHALL RETAIN THE PROPERTY RIGHTS TO ALL OF THE ABOVE MATERIALS, INCLUDING THE COPYRIGHT THERETO. COPYING OR REPRODUCTION OF INSTRUMENTS OF SERVICE WITHOUT THE EXPRESS CONSENT OF KSA IS STRICTLY PROHIBITED.

City of Port Arthur Texas

TBPE FIRM #22626

NO.	DATE	REVISION

GENERAL NOTES:

REGISTERED ARCHITECT JAMES E. SELMAN 19483 STATE OF TEXAS
01/06/2026

DATE: JANUARY 2026

PROJECT TITLE:

PORT ARTHUR TRANSIT PARKING LOT

DRAWING TITLE:

LIFE SAFETY INFORMATION

DRAWING NUMBER: G1.01

SHEET NUMBER: 24

SHEET TOTAL: 59

SCALE: 12" = 1'-0"

DRAWN BY: JIK

CHECKED BY: JES

\\ksa.net\gateway\Projects\MI2289\008 CAD\31 Revit\MI2289 - December 2025.rvt
12/31/2025 2:23:19 PM

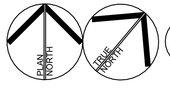

01 ACHITECTURAL SITE PLAN
3/64" = 1'-0"

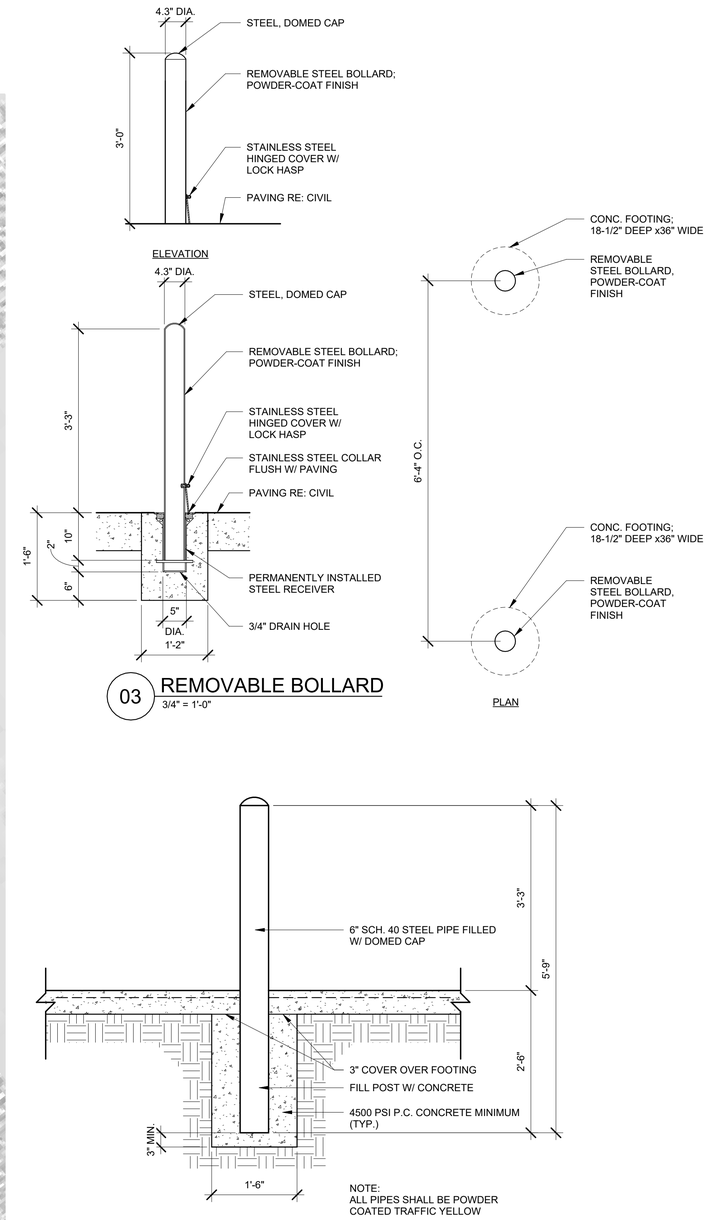

03 REMOVABLE BOLLARD
3/4" = 1'-0"

02 PIPE BOLLARD DETAIL
3/4" = 1'-0"

KSA
1111 Hawn Avenue
Shreveport, LA 71107
T.318.221.7501 F.318.221.7635
www.ksaeng.com
TBPE Firm Registration No. F-1356

01.06.2026
MI.2289

COPYRIGHT
ALL REPORTS, PLANS, SPECIFICATIONS, COMPUTER FILES, FIELD DATA, NOTES AND OTHER DOCUMENTS AND ANY INSTRUMENTS PREPARED BY KSA, AS INSTRUMENTS OF SERVICE SHALL REMAIN THE PROPERTY OF KSA. KSA SHALL RETAIN ALL COMMON LAW, STATUTORY AND OTHER PRESERVED RIGHTS, INCLUDING THE COPYRIGHT THERETO. COPYING OR REPRODUCTION OF INSTRUMENTS OF SERVICE WITHOUT THE EXPRESS CONSENT OF KSA IS STRICTLY PROHIBITED.

City of Port Arthur Texas

TBPE FIRM #22626

NO.	DATE	REVISION

GENERAL NOTES:

DATE: JANUARY 2026

PROJECT TITLE:

PORT ARTHUR TRANSIT PARKING LOT

DRAWING TITLE:

ARCHITECTURAL SITE PLAN

DRAWING NUMBER: AS1.01

SHEET NUMBER: 25

SHEET TOTAL: 59

SCALE: As indicated

DRAWN BY: JIK

CHECKED BY: JES

\\ksa.net\gateway\Projects\MI2289\008 CAD\31 Revit\MI2289 - December 2025.rvt
12/31/2025 2:23:19 PM

SYMBOL LEGEND:

- EXISTING WALL
- NEW WALL
- ROOM NAME / XXX — ROOM TAG
- XXX — DOOR TAG - RE: DOOR SCHEDULE
- XX — WINDOW TAG
- XX — KEYNOTE
- X — WALL TYPE TAG
- XX — ROOM SIGNAGE TAG RE: ROOM SIGNAGE SCHEDULE
- X / XX.XX — ELEVATION TAG (INTERIOR)
- X / XX.XX — BUILDING SECTION REFERENCE
- X / XX.XX — WALL SECTION REFERENCE
- X / XX.XX — ENLARGED VIEW/ DETAIL CALLOUT
- XXX / X — MATERIAL (CPT, VCT, CT, CONC); FLOOR FINISH TAG; NUMBER (IF THERE IS MORE THAN ONE COLOR OF THE SAME MATERIAL)
- XXX | XXX — CHANGE IN FLOOR FINISH (CPT,VCT,CT,CONC)
- X — COLUMN GRID LINE
- 10'-0" — DIMENSION LINE
- ℄ — CENTERLINE
- E.J. — EXPANSION JOINT
- BREAK LINE
- FIRST FLOOR / EL. = XX'-X" — ELEVATION (SECTIONS & ELEVATIONS)
- 12 / X — ROOF SLOPE
- 1 HOUR FIRE WALL CONSTRUCTION
- 2 HOUR FIRE WALL CONSTRUCTION
- NORTH ARROW
- 0'-0" A.F.F. — SPOT ELEVATION (PLAN ONLY)
- FG = 000.00 — FINISH GRADE ELEVATION (PLAN ONLY)
- ONE WAY TRAFFIC
- TWO WAY TRAFFIC

MATERIAL LEGEND:

AL	ALUMINUM
AM	ACOUSTICAL MATERIAL
CONC	CONCRETE
CPT	CARPET
CT	CERAMIC TILE
HW	DOOR HARDWARE
GC	GLAZED COATING
GWB	GYPSUM WALL BOARD
HM	HOLLOW METAL
MBL	MARBLE
MT	MARBLE THRESHOLD
PL	PLASTIC LAMINATE
PNTE	PAINT (EPOXY)
PNTLO	PAINT (LOW ODOR)
RB	RESILIENT BASE
RST	RUBBER STAIR TREAD
SFT	SPECIAL FLOOR TREATMENT
SS	STAINLESS STEEL
ST	STAIN
TS	TRANSITION STRIP
TZ	SYNTHETIC MATRIX TERRAZO
VCT	VINYL COMPOSITION TILE
VWC	VINYL WALL COVERING
WD	WOOD

ABBREVIATION LEGEND:

ADD ALT	ADDITIVE ALTERNATIVE
A.F.F.	ABOVE FINISHED FLOOR
B.O.	BOTTOM OF
BLDG.	BUILDING
C.G.	CORNER GUARD
C.J.	CONTROL JOINT
CLG.	CEILING
CMU	CONCRETE MASONRY UNIT
D.S.	DOWN SPOUT
DIA.	DIAMETER
E.J.	EXPANSION JOINT
E.W.C.	ELECTRIC WATER COOLER
EX.	EXISTING
EXP.	EXPOSED STRUCTURE
F.G.	FINISH GRADE
F.O.	FACE OF
FIN. FLR.	FINISHED FLOOR
GYP. BD.	GYPSUM BOARD
HORZ.	HORIZONTAL
HT.	HEIGHT
INSUL.	INSULATION
JT.	JOINT
LAM.	LAMINATED
L.W.	LINE WEIGHT
MANUF.	MANUFACTURER
M.E.G.	MATCH EXISTING GRADE
MTL.	METAL
MWI#	MILLWORK ITEM NO.
N.I.C.	NOT IN CONTRACT
O.C.	ON CENTER
O.D.	OUTSIDE DIAMETER
O.F.C.I.	OWNER FURNISHED CONTRACTOR INSTALLED
O.F.O.I.	OWNER FURNISHED OWNER INSTALLED
O.H.	OPPOSITE HAND
PCCP:	PORTLAND CEMENT CONCRETE PAVING
RE:	REFERENCE
SIM.	SIMILAR
THK.	THICK
T.O.	TOP OF
TYP.	TYPICAL
U.N.O.	UNLESS NOTED OTHERWISE
VERT.	VERTICAL
W.P.	WALL PADDING

GENERAL NOTES:

1. CONSTRUCTION AND INSTALLATION SHALL CONFORM TO ALL FEDERAL, STATE, AND LOCAL CODES AND ORDINANCES.
2. SEAL ALL PENETRATIONS AT EXTERIOR BUILDING CONSTRUCTION. PROVIDE A SEALED BUILDING ENVELOPE TO PREVENT INFILTRATION OF MOISTURE VAPOR AIR AND LIGHT TRANSMISSION.
3. CONTRACTOR SHALL OBTAIN AND PAY FOR ALL PERMITS, AND INSPECTIONS REQUIRED IN CONNECTION WITH THE WORK. THE CONTRACTOR SHALL PAY FOR ALL PLAN REVIEW FEES ASSOCIATED WITH OBTAINING A BUILDING PERMIT.
4. ALL WALLS ARE DIMENSIONED TO FACE OF STUD, ℄OF COLUMN, OR FACE OF MASONRY UNIT.
5. CONTRACTOR SHALL VERIFY ALL SCALES & DIMENSIONS.
6. DO NOT SCALE DRAWINGS. IF DIMENSIONS ARE IN QUESTION,THE CONTRACTOR SHALL BE RESPONSIBLE FOR OBTAINING CLARIFICATION FROM THE ARCHITECT.

City of Port Arthur Texas — Energy City

TBPE FIRM #22626

NO.	DATE	REVISION

GENERAL NOTES:

REGISTERED ARCHITECT — JAMES E. SELMAN — 19483 — STATE OF TEXAS — 01/06/26

DATE: JANUARY 2026

PROJECT TITLE:

PORT ARTHUR TRANSIT PARKING LOT

DRAWING TITLE:

GENERAL ARCHITECTURAL INFORMATION

DRAWING NUMBER: A0.01

SHEET NUMBER: 26 — SHEET TOTAL: 59

SCALE: 12" = 1'-0"

DRAWN BY: JIK — CHECKED BY: JES

KSA
1111 Hawn Avenue
Shreveport, LA 71107
T.318.221.7501 F.318.221.7635
www.ksaeng.com
TBPE Firm Registration No. F-1356

01.06.2026

MI.2289

COPYRIGHT
ALL REPORTS, PLANS, SPECIFICATIONS, COMPUTER FILES, FIELD DATA, NOTES AND OTHER DOCUMENTS AND ANY INSTRUMENTS PREPARED BY KSA, AS INSTRUMENTS OF SERVICE SHALL REMAIN THE PROPERTY OF KSA. KSA SHALL RETAIN THE PROPRIETARY RIGHTS, INCLUDING THE COPYRIGHT THERETO. COPYING OR REPRODUCTION OF INSTRUMENTS OF SERVICE WITHOUT THE EXPRESS CONSENT OF KSA IS STRICTLY PROHIBITED.

\\ksa.net\gateway\Projects\MI2289\008 CAD\31 Revit\MI2289 - December 2025.rvt
12/31/2025 2:23:04 PM

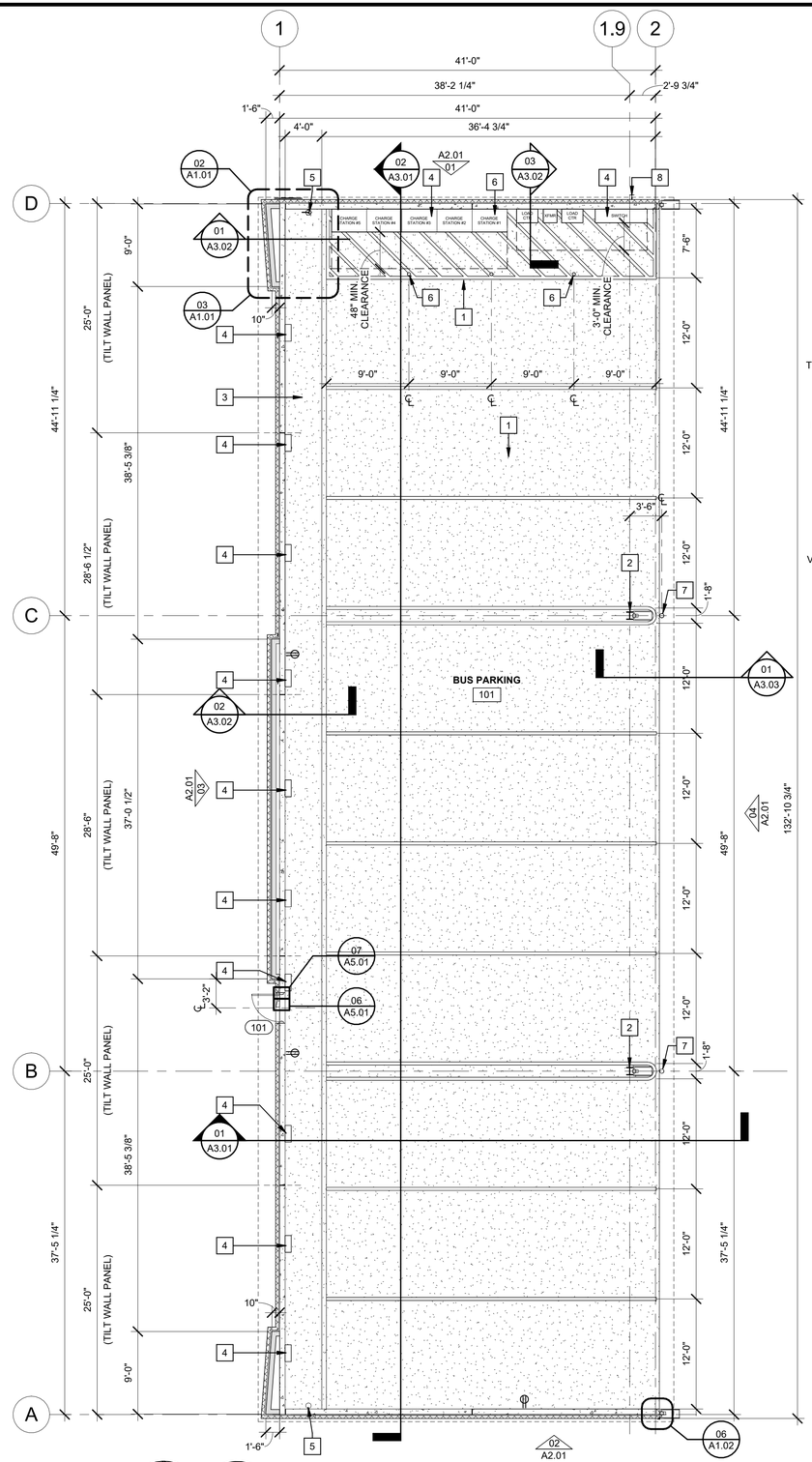

01 BUS CANOPY PLAN
1/8" = 1'-0"

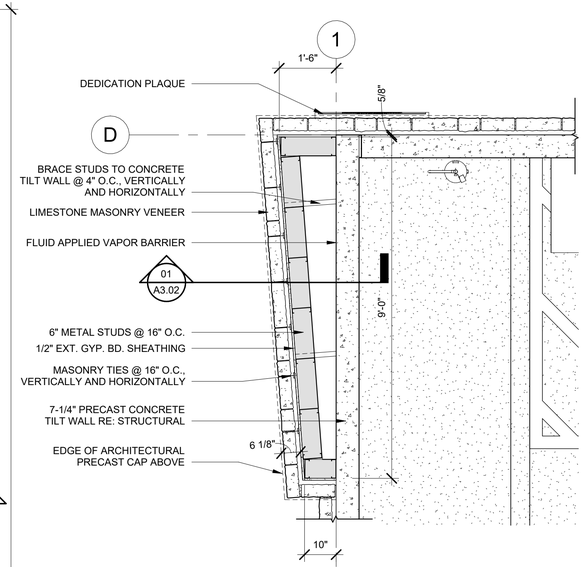

02 ENLARGED PLAN @ STONE PILASTER
1/2" = 1'-0"

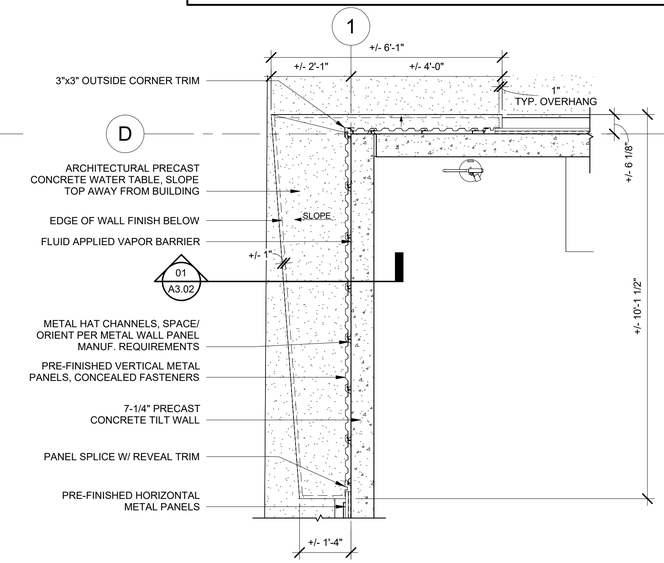

03 ENLARGED PLAN @ STONE PILASTER II
1/2" = 1'-0"

KEYNOTES:

1	PARKING STRIPING	6	REMOVABLE STEEL BOLLARD RE: 03/AS1.01
2	STEEL BUILDING COLUMN RE: STRUCTURAL	7	CONCRETE FILLED PIPE BOLLARD RE: 02/AS1.01
3	CONCRETE SIDEWALK	8	HOSE BIBB RE: CIVIL
4	ELECTRICAL GEAR RE: ELECTRICAL		
5	WALL MOUNTED FIRE EXTINGUISHER		

DOOR/ FRAME TYPE LEGEND:

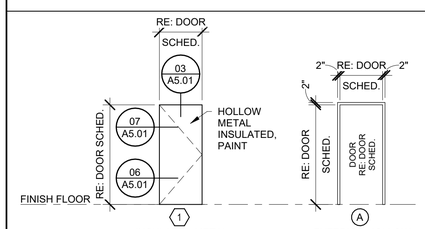

1 INSULATED METAL EXTERIOR DOOR

A EXTERIOR HOLLOW METAL DOOR FRAME

WINDOW TYPE LEGEND:

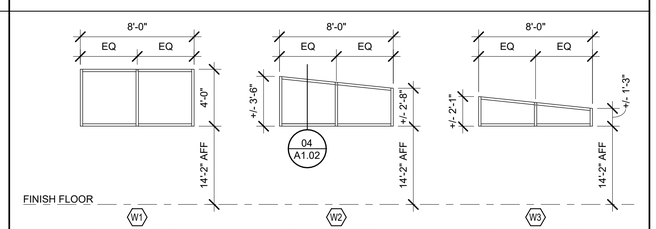

W1 PRE-FINISHED EXTERIOR ALUMINUM STOREFRONT W/ LAMINATE GLAZING

W2 PRE-FINISHED EXTERIOR ALUMINUM STOREFRONT W/ LAMINATE GLAZING

W3 PRE-FINISHED EXTERIOR ALUMINUM STOREFRONT W/ LAMINATE GLAZING

DOOR SCHEDULE

MARK	DOOR WIDTH	HEIGHT	THICKNESS	MATERIAL	TYPE	FINISH	GLAZING	FRAME MATERIAL	TYPE	FINISH	FIRE RATING	HARDWARE	COMMENTS
101	3'-0"	7'-0"	1 3/4"	MI	1	PT	-	HM	A	PT		EXTERIOR	

DOOR SCHEDULE LEGEND:

PT	PAINT
HM	HOLLOW METAL
MI	METAL INSULATED

DOOR HARDWARE LEGEND:

EXTERIOR:

3 EA.	HINGES (PER LEAF)
1 EA.	DEADBOLT (PER LEAF)
1 EA.	CLOSER (PER LEAF)
1 EA.	WEATHERSTRIP (PER LEAF)
1 EA.	THRESHOLD
1 EA.	SWEEP (PER LEAF)

KSA
1111 Hawn Avenue
Shreveport, LA 71107
T.318.221.7501 F.318.221.7635
www.ksaeng.com
TBPE Firm Registration No. F-1356

01.06.2026
MI.2289

COPYRIGHT
ALL REPORTS, PLANS, SPECIFICATIONS, COMPUTER FILES, FIELD DATA, NOTES AND OTHER DOCUMENTS AND ANY INSTRUMENTS PREPARED BY KSA, AS INSTRUMENTS OF SERVICE SHALL REMAIN THE PROPERTY OF KSA. KSA SHALL RETAIN ALL COMMON LAW, STATUTORY AND OTHER PRESERVED RIGHTS, INCLUDING THE COPYRIGHT THEREIN. COPYING OR REPRODUCTION OF INSTRUMENTS OF SERVICE WITHOUT THE EXPRESS CONSENT OF KSA IS STRICTLY PROHIBITED.

City of Port Arthur Texas

TBPE FIRM #22626

NO.	DATE	REVISION

GENERAL NOTES:

REGISTERED ARCHITECT JOHN E. SELLERS 19483 STATE OF TEXAS 01/06/26

DATE: JANUARY 2026

PROJECT TITLE:

PORT ARTHUR TRANSIT PARKING LOT

DRAWING TITLE:

FLOOR PLAN

DRAWING NUMBER: A1.01

SHEET NUMBER: 27

SHEET TOTAL: 59

SCALE: As indicated

DRAWN BY: JIK

CHECKED BY: JES

\\ksa.net\gateway\Projects\MI2289\008 CAD\31 Rev\MI2289 - December 2025.rvt
12/31/2025 2:23:05 PM

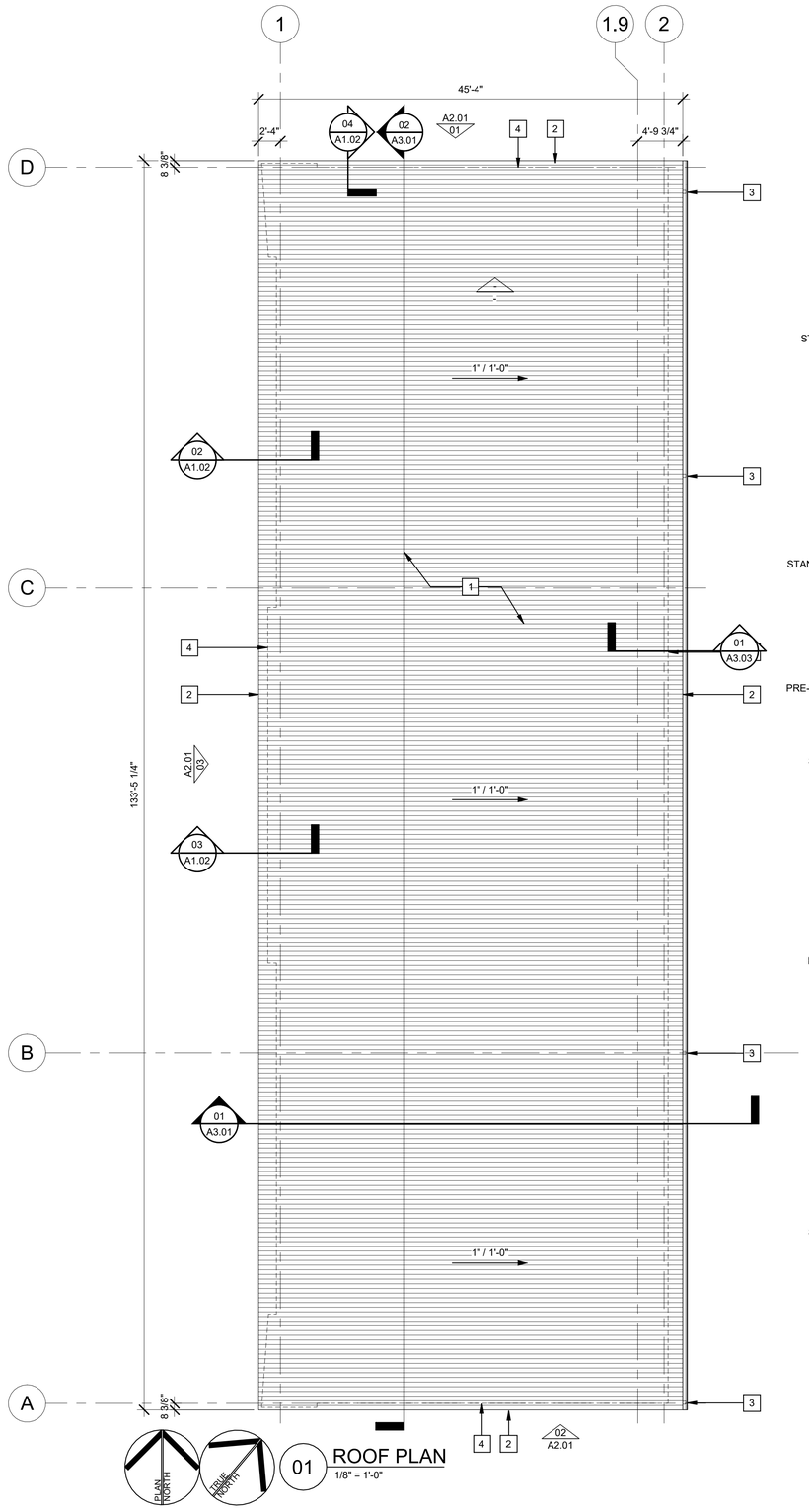

01 ROOF PLAN
1/8" = 1'-0"

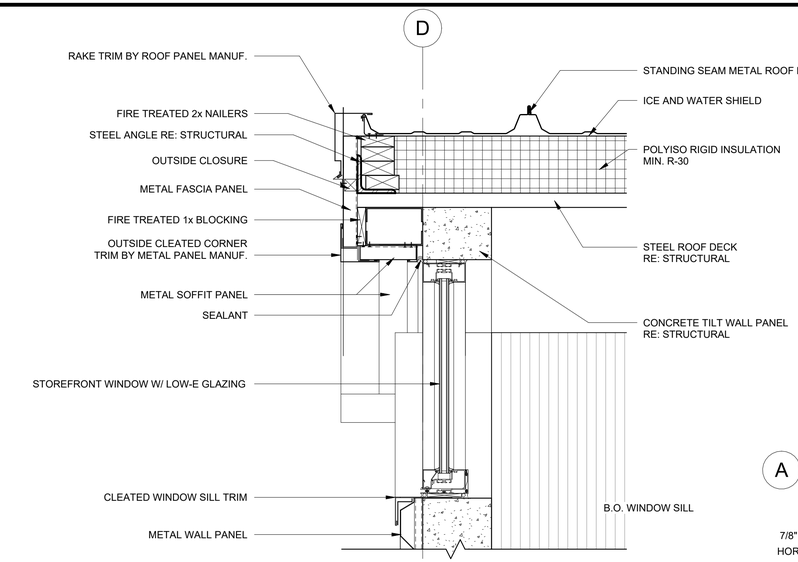

04 ROOF EDGE DETAIL III
1 1/2" = 1'-0"

KEYNOTES:

1. PRE-FINISHED STANDING SEAM METAL ROOF, TYP.
2. PRE-FINISHED METAL FASCIA
3. PRE-FINISHED ALUMINUM GUTTER AND DOWNSPOUT
4. DASHED LINE REPRESENTS EDGE OF BUILDING BELOW

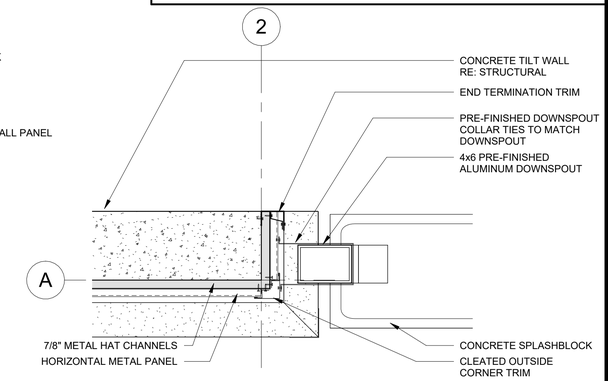

06 PL-ENLARGED CORNER DETAIL
1 1/2" = 1'-0"

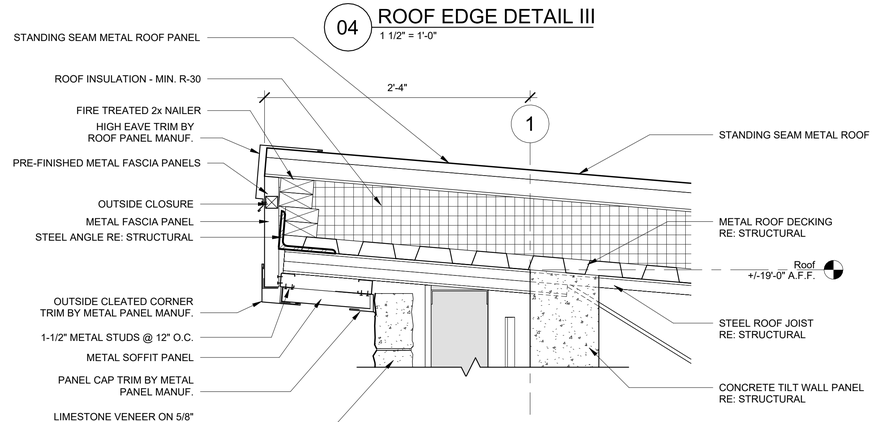

03 ROOF EDGE DETAIL II
1 1/2" = 1'-0"

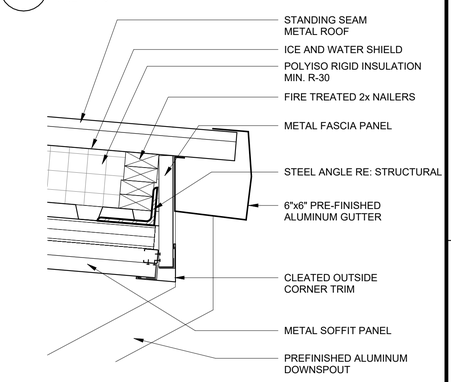

05 ROOF EDGET DETAIL IV
1 1/2" = 1'-0"

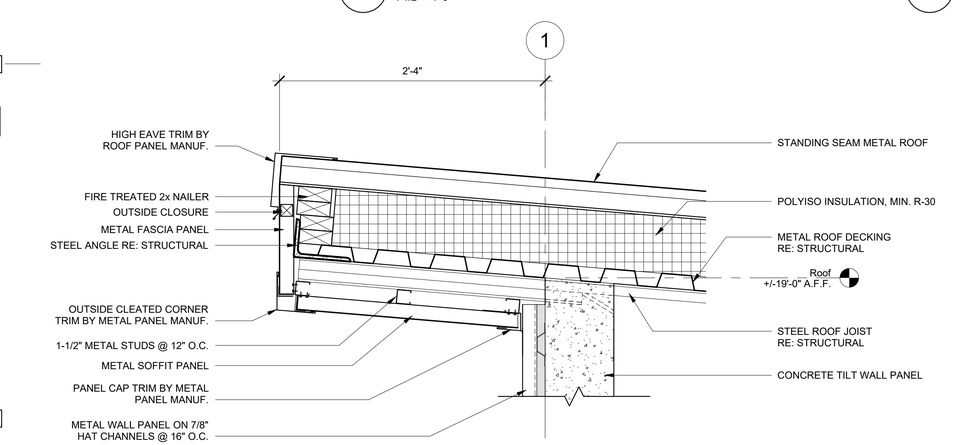

02 ROOF EDGE DETAIL I
1 1/2" = 1'-0"

City of Port Arthur Texas

TBPE FIRM #22626

NO.	DATE	REVISION

GENERAL NOTES:

REGISTERED ARCHITECT JOHN E. SELMAN 19483 STATE OF TEXAS 01/06/26

DATE: JANUARY 2026

PROJECT TITLE:

PORT ARTHUR TRANSIT PARKING LOT

DRAWING TITLE:

ROOF PLAN

DRAWING NUMBER: A1.02

SHEET NUMBER: 28

SHEET TOTAL: 59

SCALE: As indicated

DRAWN BY: JIK

CHECKED BY: JES

KSA
1111 Hawn Avenue
Shreveport, LA 71107
T.318.221.7501 F.318.221.7635
www.ksaeng.com
TBPE Firm Registration No. F-1356

01.06.2026

MI.2289

COPYRIGHT
ALL REPORTS, PLANS, SPECIFICATIONS, COMPUTER FILES, FIELD DATA, NOTES AND OTHER DOCUMENTS AND ANY INSTRUMENTS PREPARED BY KSA, AS INSTRUMENTS OF SERVICE SHALL REMAIN THE PROPERTY OF KSA. KSA SHALL RETAIN ALL COMMON LAW, STATUTORY AND OTHER PRESERVED RIGHTS, INCLUDING THE COPYRIGHT THEREIN. ANY REPRODUCING OR REPRODUCTION OF INSTRUMENTS OF SERVICE WITHOUT THE EXPRESS CONSENT OF KSA IS STRICTLY PROHIBITED.

\\ksa.net\gateway\Projects\MI2289\008 CAD\31 Rev\MI2289 - December 2025.rvt
12/31/2025 2:23:06 PM

KEYNOTES:

1	LIMESTONE MASONRY VENEER	7	ALUMINUM STOREFRONT WINDOWS	13	PRE-FINISHED METAL FASCIA	19	WALL MOUNTED LIGHT FIXTURE RE: ELECTRICAL
2	PRECAST ARCHITECTURAL CONCRETE WATERTABLE	8	METAL TRIM	14	PRE-FINISHED METAL SOFFIT PANEL	20	REMOVABLE STEEL BOLLARD
3	CONCRETE TILT WALL PANEL RE: STRUCTURAL	9	METAL DOOR AND FRAME	15	6"x6" PRE-FINISHED ALUMINUM GUTTER	21	CONCRETE FILLED STEEL BOLLARD
4	HORIZONTAL METAL WALL PANEL	10	METAL BUILDING SIGN - MATCH EXISTING ADMINISTRATION BUILDING SIGN CONSTRUCTION AND COLORS	16	4"x6" PRE-FINISHED ALUMINUM DOWNSPOUTS W/ CONCRETE SPLASHBLOCKS	22	ELECTRICAL GEAR RE: ELECTRICAL
5	VERTICAL METAL WALL PANEL	11	STEEL COLUMN	17	STANDING SEAM METAL ROOF		
6	VERTICAL METAL WALL REVEAL PANEL JOINT	12	DEDICATION PLAQUE RE: 03/A3.01	18	HOSE BIBB RE: CIVIL		

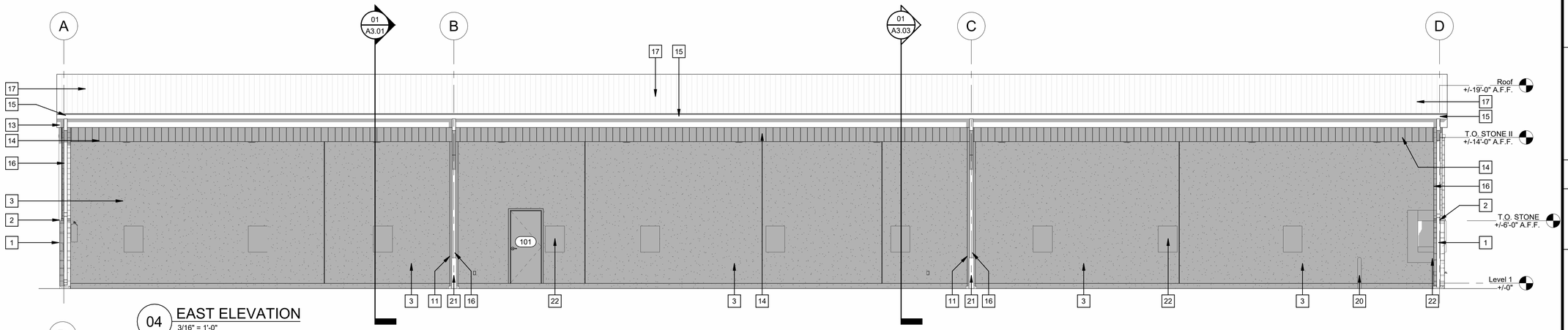

04 EAST ELEVATION
3/16" = 1'-0"

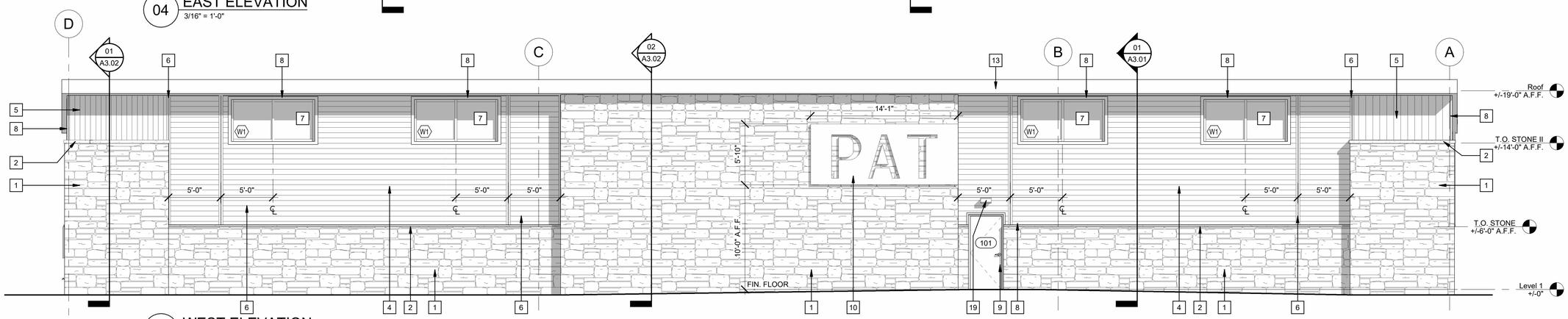

03 WEST ELEVATION
3/16" = 1'-0"

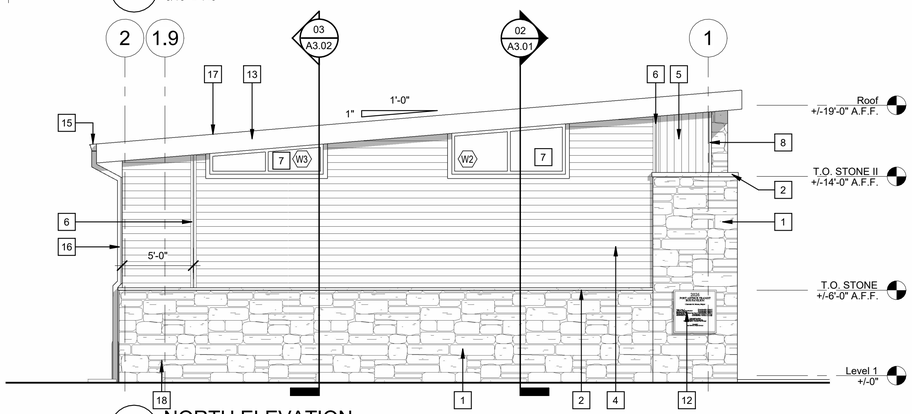

01 NORTH ELEVATION
3/16" = 1'-0"

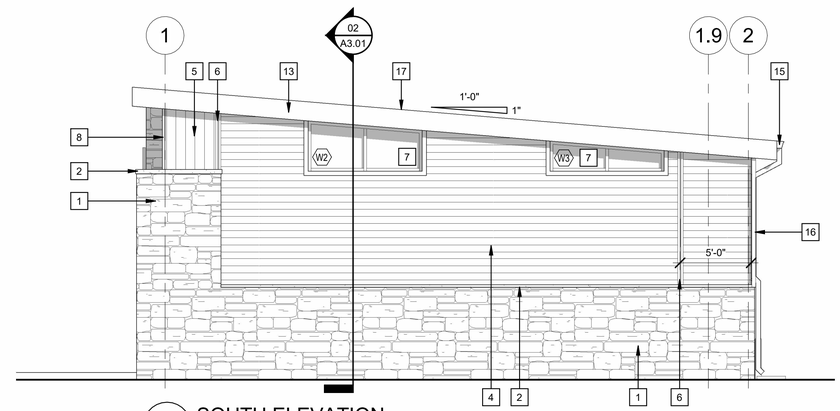

02 SOUTH ELEVATION
3/16" = 1'-0"

KSA
1111 Hawn Avenue
Shreveport, LA 71107
T.318.221.7501 F.318.221.7635
www.ksaeng.com
TBPE Firm Registration No. F-1356

01.06.2026
MI.2289

COPYRIGHT
ALL REPORTS, PLANS, SPECIFICATIONS, COMPUTER FILES, FIELD DATA, NOTES AND OTHER DOCUMENTS AND ANY INSTRUMENTS PREPARED BY KSA, AS INSTRUMENTS OF SERVICE SHALL REMAIN THE PROPERTY OF KSA. KSA SHALL RETAIN ALL COMMON LAW, STATUTORY AND OTHER PRESERVED RIGHTS, INCLUDING THE COPYRIGHT THERETO. COPYING OR REPRODUCTION OF INSTRUMENTS OF SERVICE WITHOUT THE EXPRESS CONSENT OF KSA IS STRICTLY PROHIBITED.

City of Port Arthur Texas

TBPE FIRM #22626

NO.	DATE	REVISION

GENERAL NOTES:

REGISTERED ARCHITECT JOHN E. SELLERS 19483 STATE OF TEXAS 01/06/26

DATE: JANUARY 2026

PROJECT TITLE:

PORT ARTHUR TRANSIT PARKING LOT

DRAWING TITLE:

EXTERIOR ELEVATIONS

DRAWING NUMBER: A2.01

SHEET NUMBER: 29

SHEET TOTAL: 59

SCALE: As indicated

DRAWN BY: JIK

CHECKED BY: JES

\\ksa.net\gateway\Projects\M2289\008 CAD\31 Revit\M2289 - December 2025.rvt
12/31/2025 2:23:12 PM

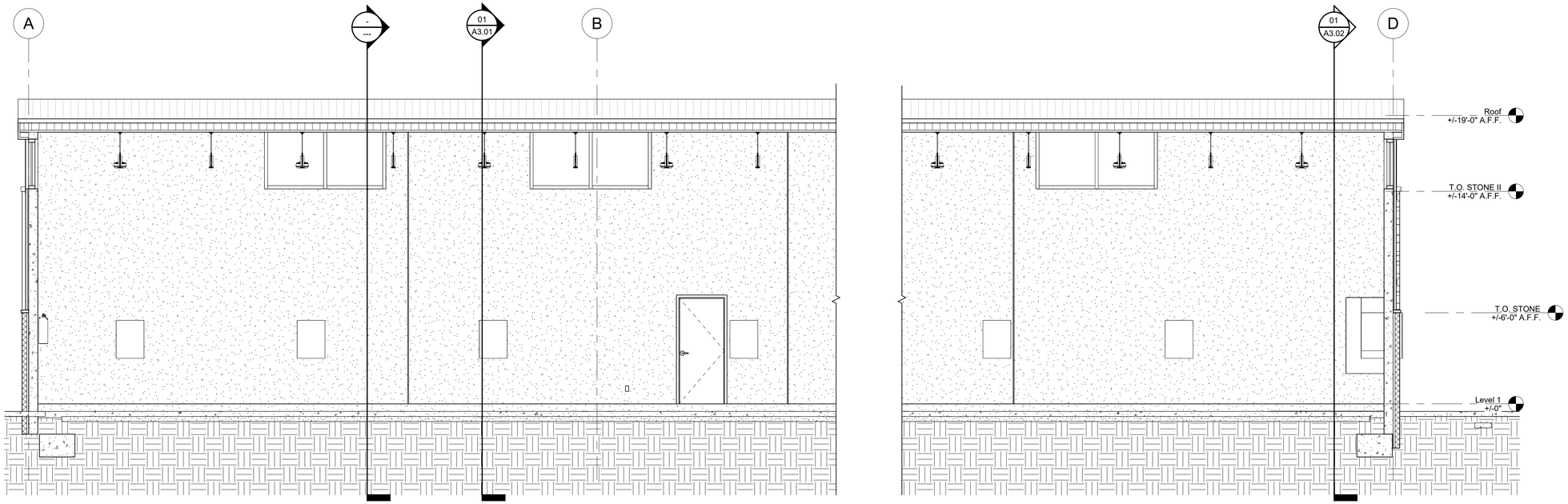

02 BUILDING SECTION II
1/4" = 1'-0"

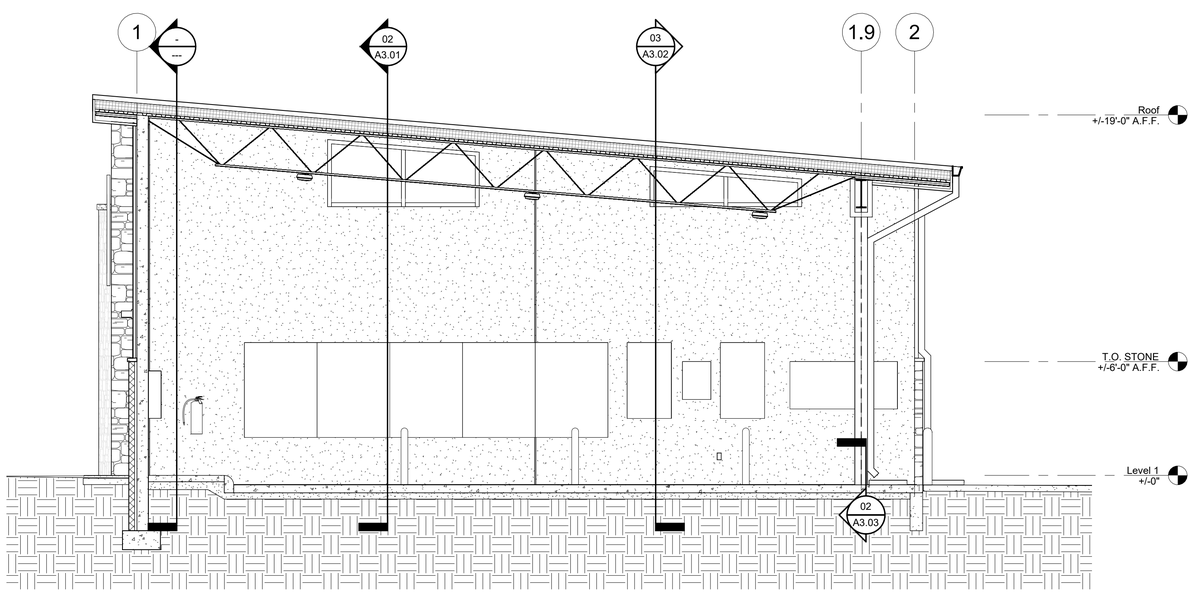

01 BUILDING SECTION
1/4" = 1'-0"

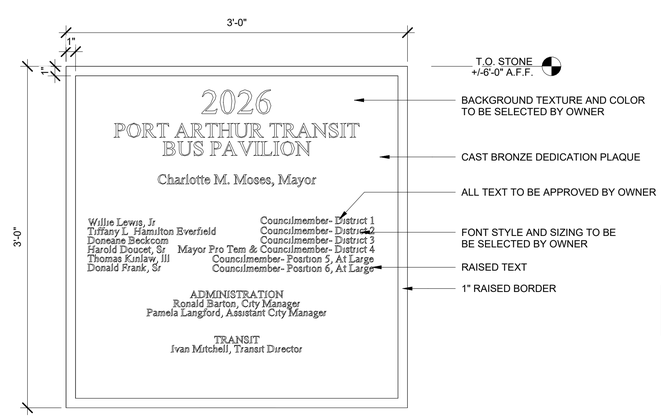

03 DEDICATION PLAQUE DETAIL
1 1/2" = 1'-0"

KSA
1111 Hawn Avenue
Shreveport, LA 71107
T.318.221.7501 F.318.221.7635
www.ksaeng.com
TBPE Firm Registration No. F-1356

01.06.2026
MI.2289

COPYRIGHT
ALL REPORTS, PLANS, SPECIFICATIONS, COMPUTER FILES, FIELD DATA, NOTES AND OTHER DOCUMENTS AND ANY INSTRUMENTS PREPARED BY KSA, AS INSTRUMENTS OF SERVICE SHALL REMAIN THE PROPERTY OF KSA. KSA SHALL RETAIN ALL COMMON LAW, STATUTORY AND OTHER PRESERVED RIGHTS, INCLUDING THE COPYRIGHT THERETO. COPYING OR REPRODUCTION OF INSTRUMENTS OF SERVICE WITHOUT THE EXPRESS CONSENT OF KSA IS STRICTLY PROHIBITED.

City of Port Arthur Texas

TBPE FIRM #22626

NO.	DATE	REVISION

GENERAL NOTES:

REGISTERED ARCHITECT JOHN E. SELLERS 19453 STATE OF TEXAS
01/06/26

DATE: JANUARY 2026

PROJECT TITLE:

PORT ARTHUR TRANSIT PARKING LOT

DRAWING TITLE:

BUILDING SECTIONS

DRAWING NUMBER: A3.01

SHEET NUMBER: 30

SHEET TOTAL: 59

SCALE: As indicated

DRAWN BY: JIK

CHECKED BY: JES

\\ksa.net\gateway\Projects\MI2289\008 CAD\31 Revit\MI2289 - December 2025.rvt
12/31/2025 2:23:12 PM

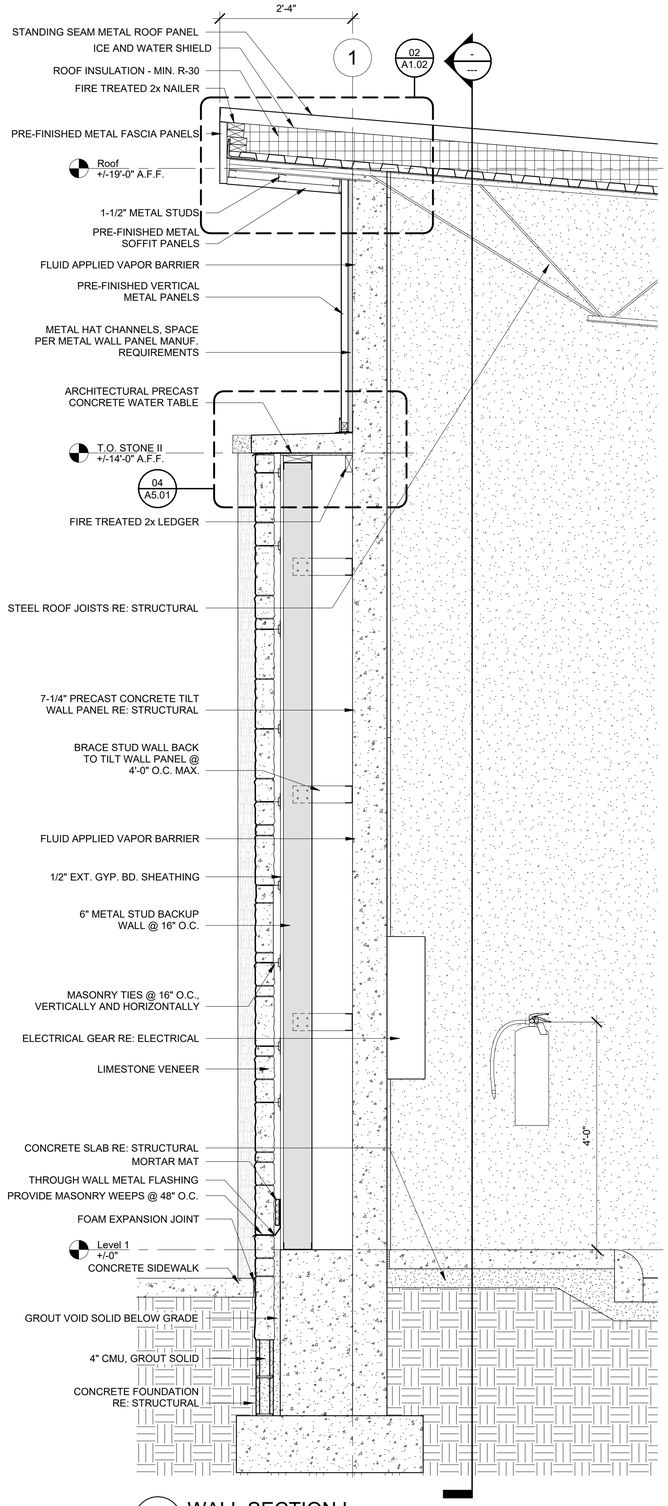

01 WALL SECTION I
3/4" = 1'-0"

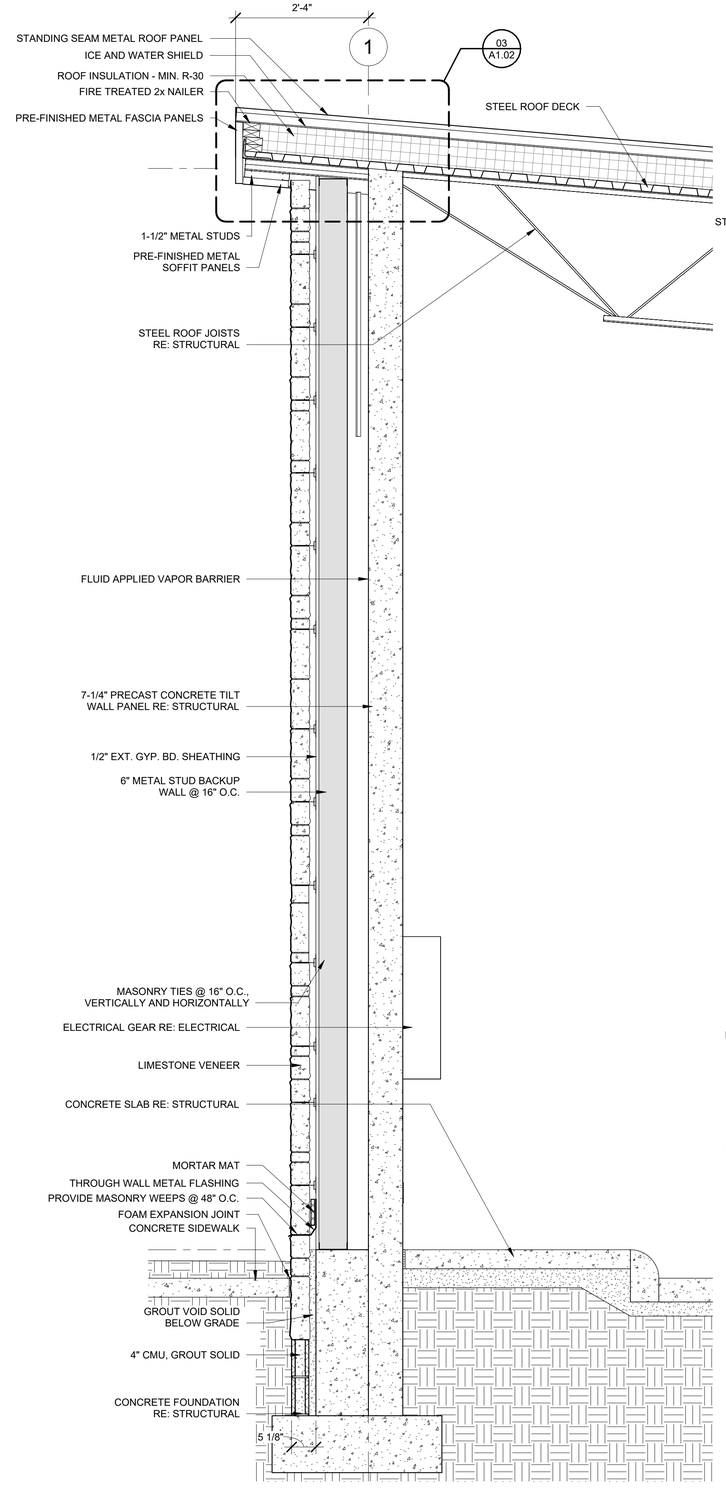

02 WALL SECTION II
3/4" = 1'-0"

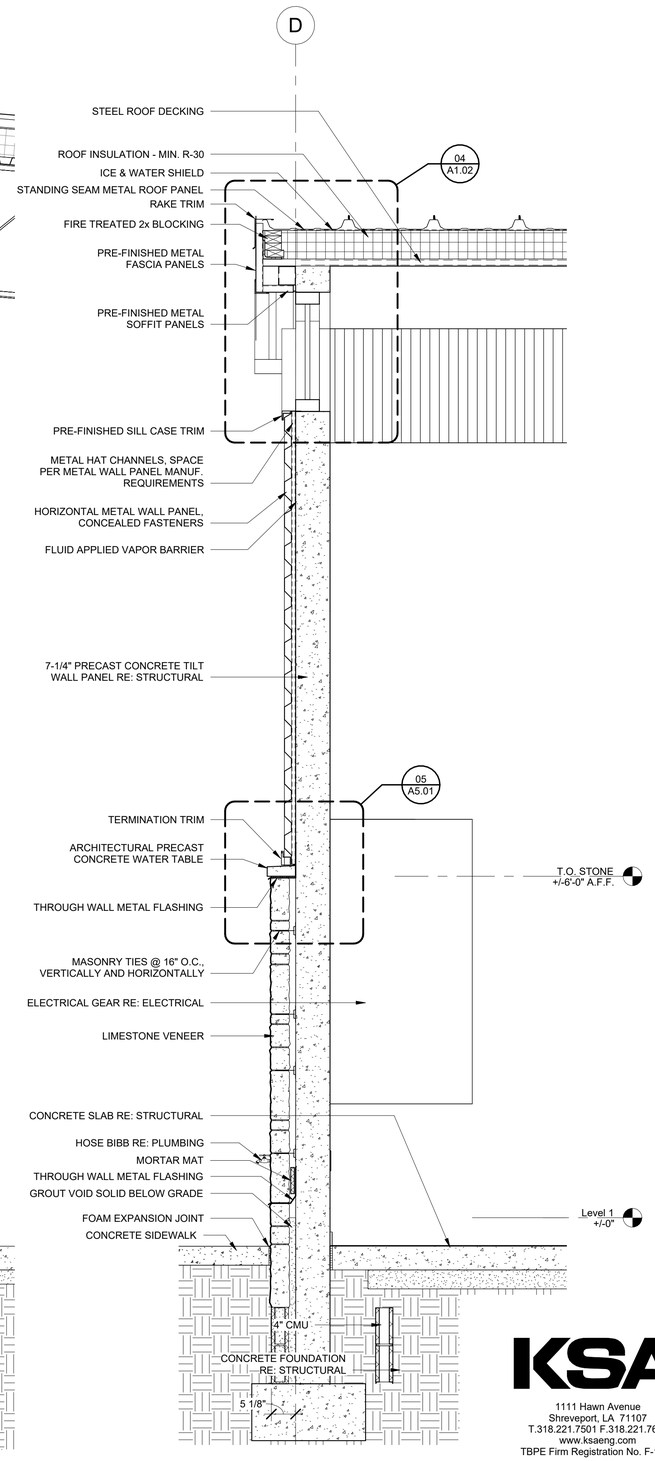

03 WALL SECTION III
3/4" = 1'-0"

KSA
1111 Hawn Avenue
Shreveport, LA 71107
T.318.221.7501 F.318.221.7635
www.ksaeng.com
TBPE Firm Registration No. F-1356

01.06.2026
MI.2289

COPYRIGHT
ALL REPORTS, PLANS, SPECIFICATIONS, COMPUTER FILES, FIELD DATA, NOTES AND OTHER DOCUMENTS AND ANY INSTRUMENTS PREPARED BY KSA, AS INSTRUMENTS OF SERVICE SHALL REMAIN THE PROPERTY OF KSA. KSA SHALL RETAIN ALL COMMON LAW, STATUTORY AND OTHER RIGHTS, INCLUDING THE COPYRIGHT THEREIN. COPYING OR REPRODUCTION OF INSTRUMENTS OF SERVICE WITHOUT THE EXPRESS CONSENT OF KSA IS STRICTLY PROHIBITED.

City of Port Arthur Texas

TBPE FIRM #22626

NO.	DATE	REVISION

GENERAL NOTES:

REGISTERED ARCHITECT
STATE OF TEXAS
19483
01/06/26

DATE: JANUARY 2026

PROJECT TITLE:

PORT ARTHUR TRANSIT
PARKING LOT

DRAWING TITLE:

WALL SECTIONS

DRAWING NUMBER:
A3.02

SHEET NUMBER: 31
SHEET TOTAL: 59

SCALE: 3/4" = 1'-0"

DRAWN BY: JIK
CHECKED BY: JES

\\ksa.net\gateway\Projects\MI2289\008 CAD\31 Revit\MI2289 - December 2025.rvt
12/31/2025 2:23:13 PM

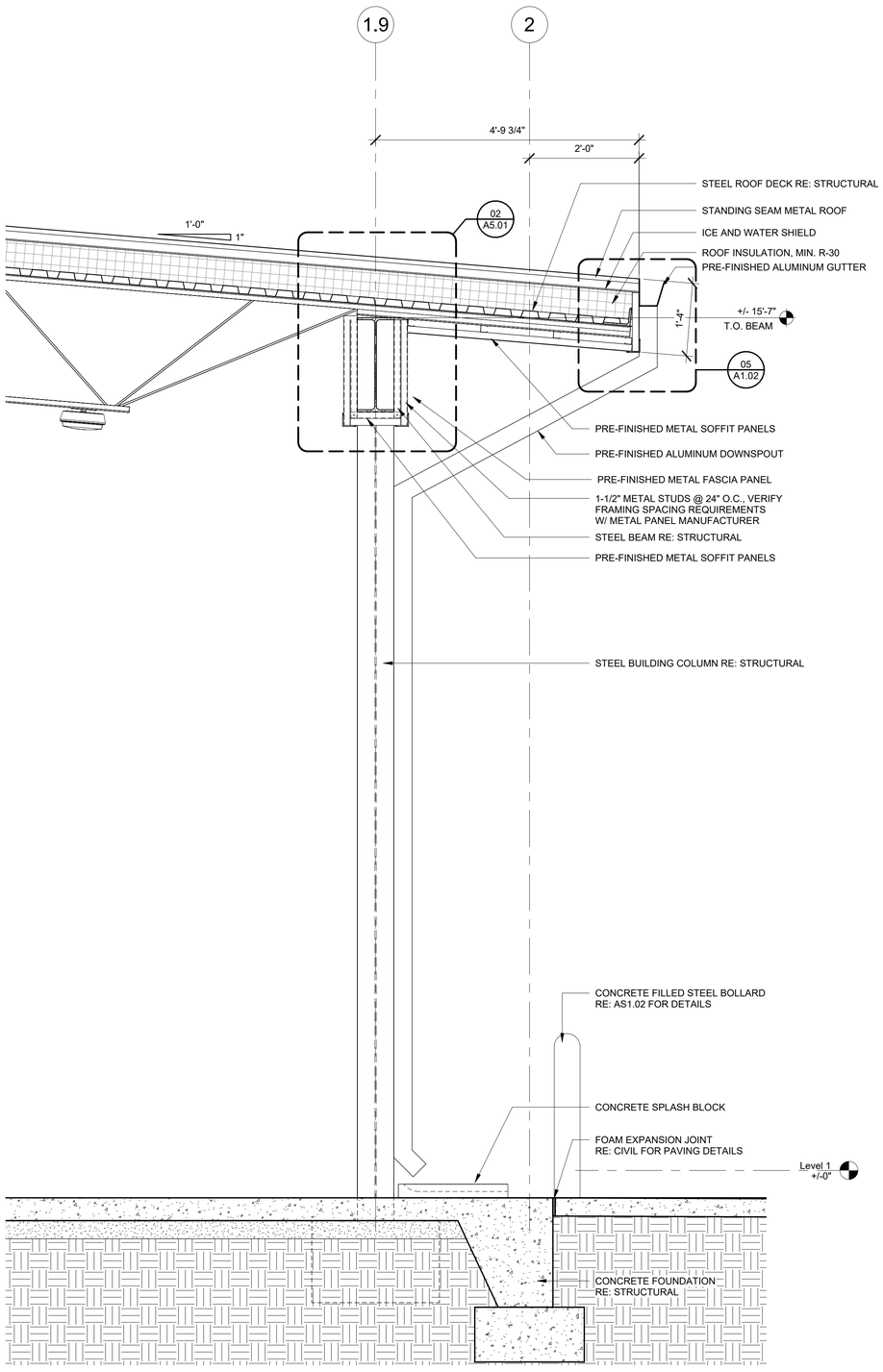

01 WALL SECTION IV
3/4" = 1'-0"

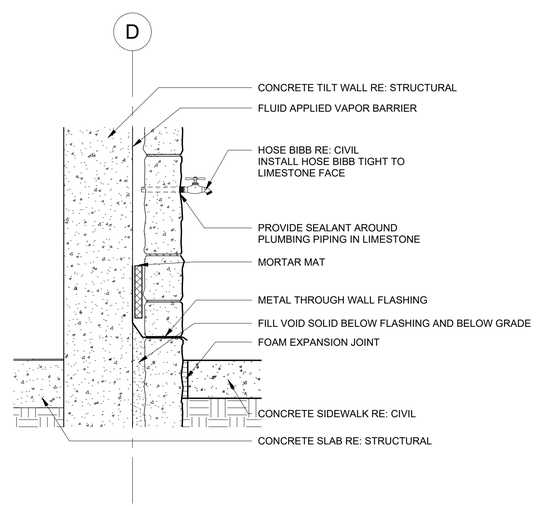

02 HOSE BIBB DETAIL
1 1/2" = 1'-0"

KSA
1111 Hawn Avenue
Shreveport, LA 71107
T.318.221.7501 F.318.221.7635
www.ksaeng.com
TBPE Firm Registration No. F-1356
01.06.2026
MI.2289

COPYRIGHT
ALL REPORTS, PLANS, SPECIFICATIONS, COMPUTER FILES, FIELD DATA, NOTES AND OTHER DOCUMENTS AND ANY INSTRUMENTS PREPARED BY KSA. AS INSTRUMENTS OF SERVICE SHALL REMAIN THE PROPERTY OF KSA. KSA SHALL RETAIN ALL COMMON LAW, STATUTORY AND OTHER PRESERVED RIGHTS, INCLUDING THE COPYRIGHT THERETO. COPYING OR REPRODUCTION OF INSTRUMENTS OF SERVICE WITHOUT THE EXPRESS CONSENT OF KSA IS STRICTLY PROHIBITED.

City of Port Arthur Texas

TBPE FIRM #22626

NO.	DATE	REVISION

GENERAL NOTES:

REGISTERED ARCHITECT JOHN E. SELLERS 19453 STATE OF TEXAS
01/09/26

DATE: JANUARY 2026

PROJECT TITLE:

PORT ARTHUR TRANSIT PARKING LOT

DRAWING TITLE:

WALL SECTIONS

DRAWING NUMBER: A3.03

SHEET NUMBER: 32

SHEET TOTAL: 59

SCALE: As indicated

DRAWN BY: JIK

CHECKED BY: JES

\\ksa.net\gateway\Projects\MI2289\008 CAD\31 Revit\MI2289 - December 2025.rvt
12/31/2025 2:23:13 PM

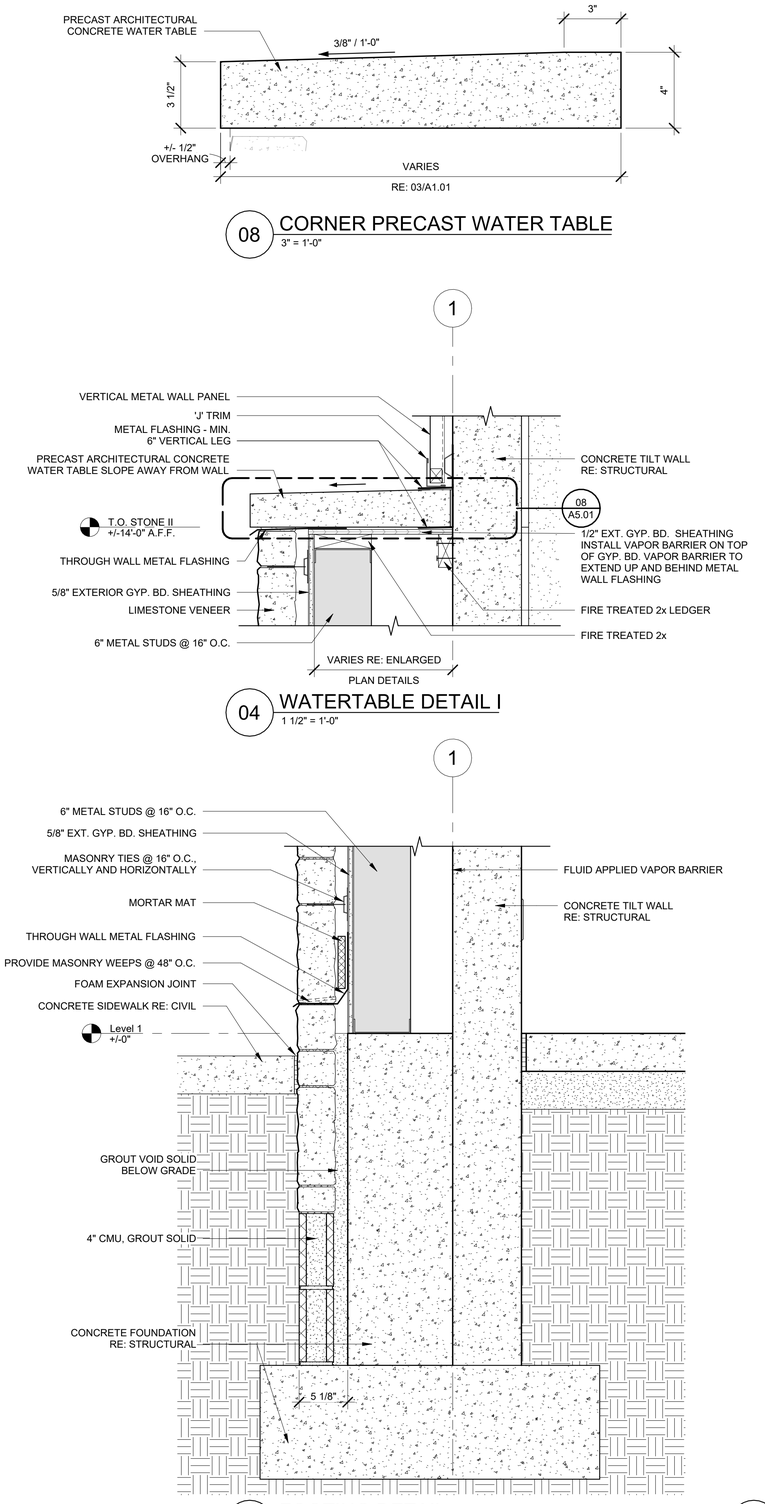

City of Port Arthur Texas

TBPE FIRM #22626

NO.	DATE	REVISION

GENERAL NOTES:

REGISTERED ARCHITECT JAMES E. SEMPLE 19483 STATE OF TEXAS 01/06/26

DATE: JANUARY 2026

PROJECT TITLE:

PORT ARTHUR TRANSIT PARKING LOT

DRAWING TITLE:

ENLARGED WALL DETAILS

DRAWING NUMBER: A5.01

SHEET NUMBER: 33

SHEET TOTAL: 59

SCALE: As indicated

DRAWN BY: JIK

CHECKED BY: JES

KSA
1111 Hawn Avenue
Shreveport, LA 71107
T.318.221.7501 F.318.221.7635
www.ksaeng.com
TBPE Firm Registration No. F-1356

01.06.2026

MI.2289

COPYRIGHT
ALL REPORTS, PLANS, SPECIFICATIONS, COMPUTER FILES, FIELD DATA, NOTES AND OTHER DOCUMENTS AND ANY INSTRUMENTS PREPARED BY KSA, AS INSTRUMENTS OF SERVICE SHALL REMAIN THE PROPERTY OF KSA. KSA SHALL RETAIN ALL COMMON LAW, STATUTORY AND OTHER PRESERVED RIGHTS, INCLUDING THE COPYRIGHT THERETO. COPYING OR REPRODUCTION OF INSTRUMENTS OF SERVICE WITHOUT THE EXPRESS CONSENT OF KSA IS STRICTLY PROHIBITED.

\\ksa.net\gateway\Projects\MI2289\008 CAD\31 Rev\MI2289 - December 2025.rvt
12/31/2025 2:23:14 PM

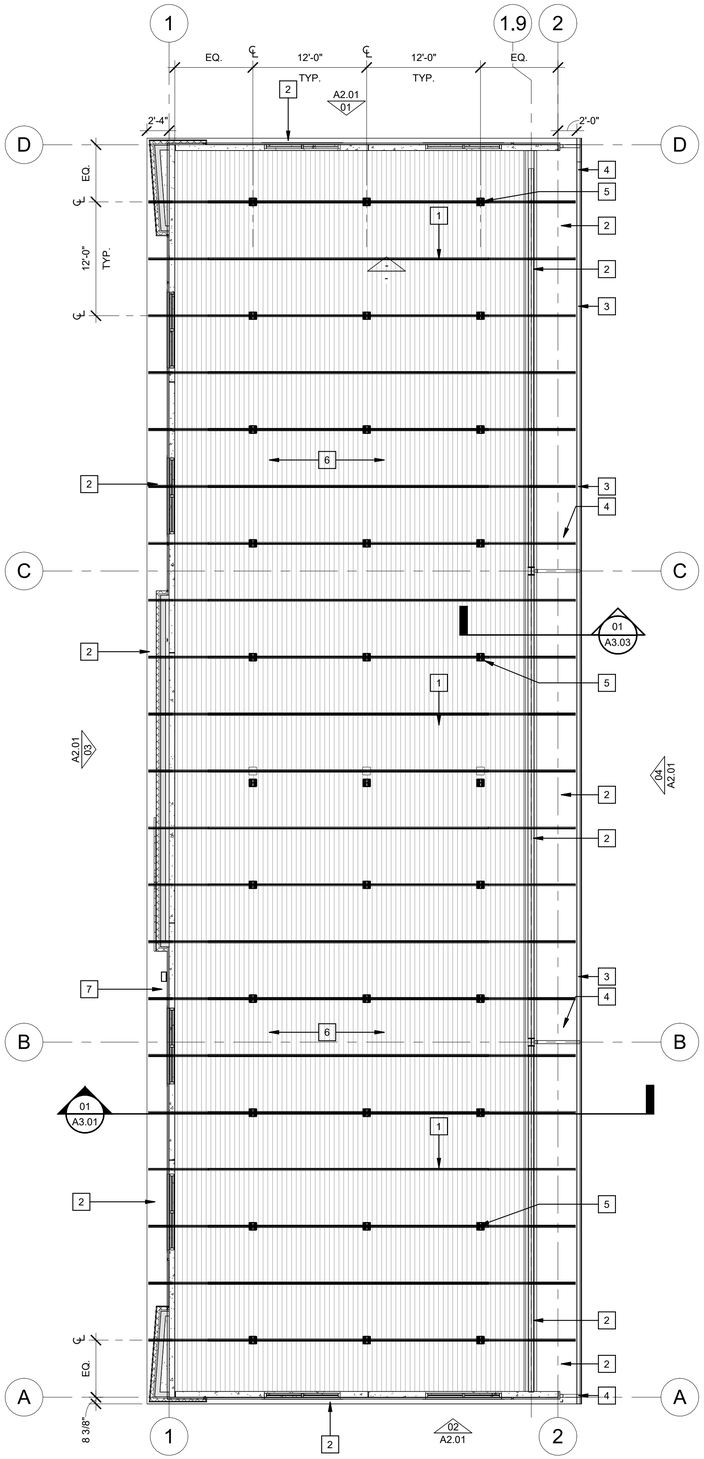

01 REFLECTED CEILING PLAN
1/8" = 1'-0"

REFLECTED CEILING LEGEND:

- 2x2 LED LIGHT FIXTURE RE: ELECTRICAL
- WALL MOUNTED LIGHT FIXTURE RE: ELECTRICAL

KEYNOTES:

1. STEEL ROOF JOIST RE: STRUCTURAL
2. PRE-FINISHED METAL SOFFIT PANELS
3. 6"x6" PRE-FINISHED ALUMINUM GUTTER
4. 4"x4" PRE-FINISHED ALUMINUM DOWNSPOUT AND CONCRETE SPLASHBLOCK
5. 2x2 LED LIGHT FIXTURE RE: ELECTRICAL
6. EXPOSED UNDERSIDE OF ROOF DECK
7. WALL MOUNTED LIGHT FIXTURE RE: ELECTRICAL

City of Port Arthur Texas

TBPE FIRM #22626

NO.	DATE	REVISION

GENERAL NOTES:

REGISTERED ARCHITECT
JOHN E. SELMER
19483
STATE OF TEXAS
01/06/2026

DATE: JANUARY 2026

PROJECT TITLE:

PORT ARTHUR TRANSIT PARKING LOT

DRAWING TITLE:

REFLECTED CEILING PLAN

DRAWING NUMBER: A7.01

SHEET NUMBER: 34

SHEET TOTAL: 59

SCALE: As indicated

DRAWN BY: JIK

CHECKED BY: JES

KSA
1111 Hawn Avenue
Shreveport, LA 71107
T.318.221.7501 F.318.221.7635
www.ksaeng.com
TBPE Firm Registration No. F-1356

01.06.2026
MI.2289

COPYRIGHT
ALL REPORTS, PLANS, SPECIFICATIONS, COMPUTER FILES, FIELD DATA, NOTES AND OTHER DOCUMENTS AND ANY INSTRUMENTS PREPARED BY KSA, AS INSTRUMENTS OF SERVICE SHALL REMAIN THE PROPERTY OF KSA. KSA SHALL RETAIN ALL COMMON LAW, STATUTORY AND OTHER PRESERVED RIGHTS, INCLUDING THE COPYRIGHT THERETO. COPYING OR REPRODUCTION OF INSTRUMENTS OF SERVICE WITHOUT THE EXPRESS CONSENT OF KSA IS STRICTLY PROHIBITED.

\\ksa.net\gateway\Projects\MI2289\008 CAD\31 Revit\MI2289 - December 2025.rvt
12/31/2025 2:23:14 PM

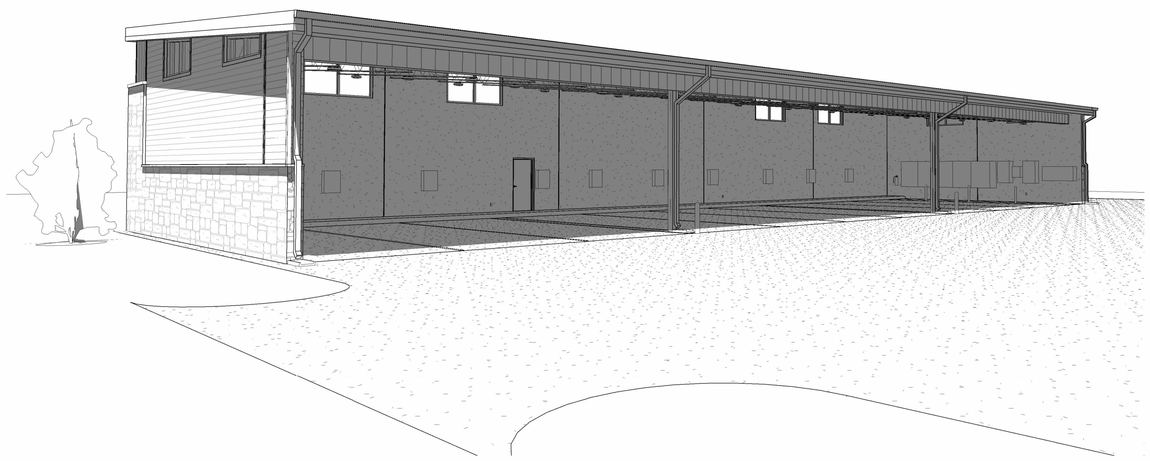

02 3D PERSPECTIVE II

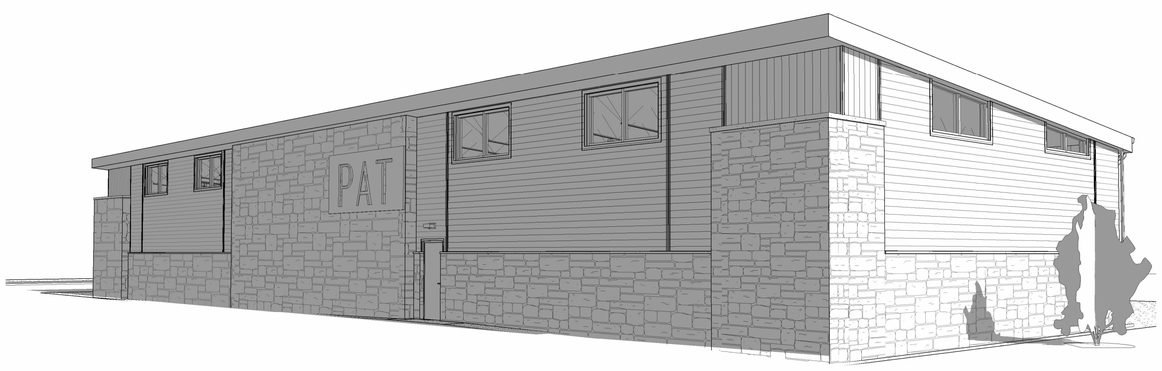

01 3D PERSPECTIVE I

City of Port Arthur Texas

TBPE FIRM #22626

NO.	DATE	REVISION

GENERAL NOTES:

DATE: JANUARY 2026

PROJECT TITLE:

PORT ARTHUR TRANSIT PARKING LOT

DRAWING TITLE:

3D PERSPECTIVES

DRAWING NUMBER: A9.01

SHEET NUMBER: 35

SHEET TOTAL: 59

SCALE:

DRAWN BY: JIK

CHECKED BY: JES

KSA
1111 Hawn Avenue
Shreveport, LA 71107
T.318.221.7501 F.318.221.7635
www.ksaeng.com
TBPE Firm Registration No. F-1356

01.06.2026

MI.2289

COPYRIGHT
ALL REPORTS, PLANS, SPECIFICATIONS, COMPUTER FILES, FIELD DATA, NOTES AND OTHER DOCUMENTS AND ANY INSTRUMENTS PREPARED BY KSA AS INSTRUMENTS OF SERVICE SHALL REMAIN THE PROPERTY OF KSA. KSA SHALL RETAIN ALL COMMON LAW, STATUTORY AND OTHER PRESERVED RIGHTS, INCLUDING THE COPYRIGHT THERETO. COPYING OR REPRODUCTION OF INSTRUMENTS OF SERVICE WITHOUT THE EXPRESS CONSENT OF KSA IS STRICTLY PROHIBITED.

\\ksa.net\gateway\Projects\MI2289\008 CAD\31 Revit\MI2289 - December 2025.rvt
12/31/2025 2:23:18 PM

STRUCTURAL PLANS

STRUCTURAL WOOD FRAMING

- LOAD-BEARING 2x WALL w/ HEADER @ OPENING BELOW
- 2x LUMBER
- PRE-MFR WOOD FLOOR TRUSS
- PRE-MFR WOOD ROOF TRUSS
- PRE-MFR WOOD ROOF GIRDER TRUSS
- 5 1/4 x 18 PSL — SPECIAL WOOD MEMBER
- 5 1/4 x 18 PSL — SPECIAL WOOD MEMBER SUPPORTING LOAD BRG WALL
- 2x WOOD MEMBER IN SECTION
- SPECIAL WOOD MEMBER IN SECTION

THIS DESIGNATION IS USED WHEN MORE THAN ONE TYPE IS USED ON A PROJECT AND A "SCHEDULE" IS PROVIDED

- 3 — HSS8X8X3/8 — 3 1/2 X 3 1/2 PSL — TYPICAL COLUMN / WOOD POST CALLOUTS
- SW4 — 3 — TYPICAL SHEARWALL w/ CALLOUT AND HOLD DOWN TYPE

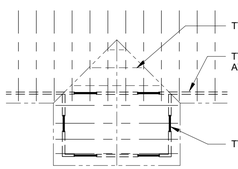

STRUCTURAL CALLOUTS

- NORTH ARROW (PLAN NORTH)
- DTL / SHT — SECTION CALLOUT
- DTL / SHT — PLAN DETAIL CALLOUT
- REVISION CLOUD & DELTA
- 99'-6" — SPOT ELEVATION
- W8X15 — 18 / 6 / 97'-4" — COLUMN / PIER CALLOUT

STRUCTURAL PLANS

- 1 — STRUCTURAL GRID
- FACE OF ARCH FINISH (MATL VARIES)
- MECHANICAL EQUIPMENT

REINFORCED CONCRETE

- STRUCTURAL CONCRETE WALL OR COLUMN IN SECTION
- 18/36/97'-4" — 18/6/97'-4" — PIERS AND GRADE BEAM FOUNDATION (STRAIGHT OR BELL)
- FOOTING AND GRADE BEAM FOUNDATION (SPREAD OR CONT)

STRUCTURAL STEEL FRAMING

- HSS6X6X3/8 — PIPE 6 STD — W8X15 — STRUCTURAL COLUMNS TUBE, PIPE OR WIDE FLANGE
- W16X26 — W16X26 — SPLICE FOR STEEL BEAM DROP-IN-SYSTEM
- W16X26 — STEEL FRAMING - PURLIN BEAM OR GIRDER
- W16X26 (26) C=1" — STEEL BEAM OR GIRDER w/ NO OF HS AND CAMBER
- MOMENT CONNECTION
- 12K1 — STEEL BAR JOIST
- BF-1 — BRACE FRAME DESIGNATION
- FLOOR/ROOF DECK SPAN DIRECTION
- ZONE FOR METAL DECK SPECIAL WELDING PATTERNS
- SLAB/ROOF DECK OPENING
- GRATING SYSTEM
- FD — FLOOR DRAIN

CMU WALLS

- LOAD-BEARING CMU WALL
- NON-LOAD-BEARING CMU WALL

STRUCTURAL ABBREVIATIONS

ABOVE FINISH FLOOR	AFF
ADDITIONAL	ADDL
AMERICAN INSTITUTE OF STEEL CONSTRUCTION	AISC
AMERICAN WELDING SOCIETY	AWS
ANCHOR BOLT	AB
AMERICAN CONC. INSTITUTE	ACI
APPROXIMATE	APPROX
ARCHITECT	ARCH
ARCHITECTURAL	ARCH
AREA DRAIN	AD
AIR CONDITIONER	A/C
AIR HANDLING UNIT	AHU
AT	@
BASEMENT	BSMT
BASE PLATE	B PL
BEAM	BM
BEARING	BRG
BELOW FINISH FLOOR	BFF
BETWEEN	BTWN
BLOCK	BLK
BLOCKING	BLKG
BOTTOM	BOT
BRICK LEDGE	BL
BRIDGING	BRDG
BUILDING	BLDG
BUILDING LINE	BLDG LINE
CANTILEVER	CANT
CAST-IN-PLACE	CIP
CEILING	CLG
CENTER LINE	CL
CLEAR	CLR
COLUMN	COL
COLD FORMED METAL	CFM
COMPRESSION, COMPRESSIBLE	COMP
CONCRETE	CONC
CONCRETE MASONRY UNIT	CMU
CONNECTION	CONNX
CONTINUOUS	CONT
CONSTRUCTION	CONSTR
CONSTRUCTION JOINT	CJ
CONTRACTOR	CONTR
COORDINATE	COORD
DEGREE	DEG
DETAIL	DTL
DEAD LOAD	DL
DIAGONAL	DIAG
DIAMETER	DIA, Ø
DIMENSION	DIM
DRAWING	DWG
DOUBLE	DBL
DOUBLE ANGLE	2L
DOWEL	DWL
DOWN	DN
EACH	EA
EACH FACE	EF
EACH WAY	EW
ELEVATION	EL
ELEVATOR	ELEV
EMBEDMENT	EMBED
ENGINEER	ENG
EQUAL	EQ
EQUIPMENT	EQUIP
EXHAUST FAN	EXF
EXISTING	EXIST (E)
EXPANSION JOINT	EJ
EXTERIOR	EXT
FABRICATOR, FABRICATE	FAB
FACE OF	FO
FACE TO FACE	F TO F
FAR SIDE	FS
FINISHED FLOOR	FIN FLR
FLOOR	FLR
FLOOR DRAIN	FD
FOOT	FT
FOOTING	FTG
FOUNDATION	FDN
FRAME	FRM
GAGE OR GAUGE	GA
GALVANIZED	GALV
GENERAL	GEN
GENERAL CONTRACTOR	GC
GIRDER TRUSS	GT
GRADE BEAM	GB
HEADED STUDS	HS
HEIGHT	HT
HIGH	HI
HIGH AND LOW	HI & LO
HORIZONTAL	HORIZ
INCH	IN
INFORMATION	INFO
INSIDE DIAMETER	ID
INSIDE FACE	IF
INTERIOR	INT
INTERMEDIATE	INTERM
JOINT	JT
JOIST	JST
KIPS (1000 LBS.)	K
KIP PER LINEAR FOOT	KLF
KIP PER SQUARE FOOT	KSF
KNOCKOUT PANEL	K/O
PANEL	
LIGHT WEIGHT	LT WT
LIVE LOAD	LL
LONGITUDINAL	LONG
LONG LEG BACK TO BACK	LLBB
LONG LEG HORIZONTAL	LLH
LONG LEG VERTICAL	LLV
LOW	LO
MANUFACTURER	MFR
MASONRY	MAS
MATERIAL	MATL
MAXIMUM	MAX
MECHANICAL	MECH
METAL	MTL
MEZZANINE	MEZZ
MIDDLE	MID
MINIMUM	MIN
MISCELLANEOUS	MISC
MOMENT CONNECTION	MC
NEAR SIDE	NS
NOMINAL	NOM
NORMAL WEIGHT	N WT
NOT APPLICABLE	NA
NOT IN CONTRACT	NIC
NOT TO SCALE	NTS
NUMBER	NO, #
ON CENTER	OC
OPENING	OPNG
OPPOSITE	OPP
OPPOSITE HAND	OH
ORIGINAL	ORIG
OUTSIDE FACE	OF
OUTSIDE DIAMETER	OD
PARALLEL	PARAL
PAVEMENT	PVMT
PERIMETER	PERIM
PERPENDICULAR	PERP
PLATE	PL
POST-TENSION	PT
POUNDS	LBS
POUND PER CUBIC FOOT PCF	
POUNDS PER SQUARE FOOT	PSF
POUNDS PER SQUARE INCH	PSI
PRECAST CONCRETE	PC
COMPRESSIBLE JOINT FILLER	CJF
PROJECTION	PROJ
QUANTITY	QTY
RADIUS	R
RECOMMENDATIONS	REC
REFER/REFERENCE	REF
REINFORCED CONCRETE PIPE	RCP
REINFORCED, REINFORCING	REINF
REQUIRED	REQD
REQUIREMENT	REQT
ROOF DRAIN	RD
ROOF TOP UNIT	RTU
SCHEDULE	SCHED
SECTION	SECT
SHEET	SHT
SHORT LEG BACK TO BACK	SLBB
SIMILAR	SIM
SLAB 0N GRADE	SOG
SPACE	SP
SPECIFICATION	SPEC
SQUARE	SQ
SQUARE FOOT/FEET	SF
STAINLESS STEEL	SS
STANDARD	STD
STEEL	STL
STEEL STUD MFR. ASSOC.	SSMA
STIFFENER	STIFF
STRAIGHT	STR
STIRRUPS	STIRR
STRUCTURAL	STRUCT
SUPPORT	SUPPT
SYMMETRICAL	SYM
TEMPERATURE	TEMP
THICK	THK
THREADED ROD	TH RD
TONGUE AND GROOVE	T&G
TOP AND BOTTOM	T&B
TOP OF	T/
TOTAL LOAD	TL
TRANSVERSE	TRANS
TYPICAL	TYP
UNLESS NOTED OTHERWISE	UNO
VERTICAL	VERT
WATER STOP	WS
WEIGHT	WT
WELDED WIRE FABRIC	WWF
WIDE FLANGE BEAM	WF
WITH	W/
WITHOUT	W/O
WORK POINT	WP

KSA
1111 Hawn Avenue
Shreveport, LA 71107
T.318.221.7501 F.318.221.7635
www.ksaeng.com
TBPE Firm Registration No. F-1356

03/27/2024

RLG CONSULTING ENGINEERS
PROJECT #2115.165
12001 N. CENTRAL EXPRESSWAY, SUITE 300
DALLAS, TEXAS 75243 214-739-8100
www.rlginc.com FIRM REG: F-493

COPYRIGHT
ALL REPORTS, PLANS, SPECIFICATIONS, COMPUTER FILES, FIELD DATA, NOTES AND OTHER DOCUMENTS PROVIDED BY KSA, AS INSTRUMENTS OF SERVICE SHALL REMAIN THE PROPERTY OF KSA. KSA SHALL RETAIN ALL COMMON LAW, STATUTORY AND OTHER PRESERVED RIGHTS, INCLUDING THE COPYRIGHT THERETO. COPYING OR REPRODUCTION OF INSTRUMENTS OF SERVICE WITHOUT THE EXPRESS CONSENT OF KSA IS STRICTLY PROHIBITED.

City of Port Arthur Texas

TBPE FIRM #22626

NO.	DATE	REVISION

GENERAL NOTES:

STATE OF TEXAS — JOHN BRENT JACKSON — 94498 — LICENSED PROFESSIONAL ENGINEER — 3/27/2024

DATE: DEC 2025

PROJECT TITLE:

PORT ARTHUR TRANSIT PARKING LOT

DRAWING TITLE:

STRUCTURAL ABBREVIATIONS

DRAWING NUMBER: S.0.00

SHEET NUMBER: 36 — SHEET TOTAL: 59

SCALE: 12" = 1'-0"

DRAWN BY: JCG — CHECKED BY: JBJ

C:\Users\bjackson\OneDrive - RLG, Inc\Documents\2115.165_Struct_R23_bjackson.rvt

DEFERRED SUBMITTALS & DELEGATED DESIGN NOTES

1. DEFERRED SUBMITTALS ARE PORTIONS OF THE OVERALL DESIGN WHICH ARE NOT SUBMITTED AT TIME OF PERMIT APPLICATION AND ARE TO BE SUBMITTED TO THE BUILDING OFFICIAL.

2. DELEGATED DESIGN AND DEFERRED SUBMITTALS WILL BE REVIEWED FOR THE LIMITED PURPOSE OF CHECKING FOR CONFORMANCE WITH INFORMATION GIVEN IN THE CONTRACT DOCUMENTS. SUBMITTAL REVIEW WILL NOT BE CONDUCTED FOR THE PURPOSE OF DETERMINING THE ACCURACY AND COMPLETENESS OF OTHER DETAILED INFORMATION SUCH AS DIMENSIONS AND QUANTITIES, OR FOR SUBSTANTIATING INSTRUCTIONS FOR INSTALLATION OR SYSTEMS DESIGNED BY THE CONTRACTOR WHICH REMAINS THE RESPONSIBILITY OF THE CONTRACTOR.

   REVIEW SHALL NOT CONSTITUTE APPROVAL OF SAFETY PRECAUTIONS OR OF ANY CONSTRUCTION MEANS, METHODS, SEQUENCES OR PROCEDURES.

   APPROVAL OF A SPECIFIC ITEM SHALL NOT INDICATE APPROVAL OF AN ASSEMBLY OF WHICH THE ITEM IS A COMPONENT.

3. FOLLOWING DELEGATED DESIGN ARE TO BE PROVIDED FOR REVIEW:
   - A. TEMPORARY SHORING / BRACING OF STRUCTURAL ELEMENTS
   - B. STEEL FRAMING CONNECTION CALCULATIONS

   SUPPLIER'S ENGINEERS SHALL PROVIDE SIGNED AND SEALED CALCULATIONS WITH THE SUBMITTAL FOR REVIEW.

   REVIEW WILL BE LIMITED TO CONFORMANCE WITH DESIGN AND PERFORMANCE CRITERIA SPECIFIED IN THE CONSTRUCTION DOCUMENTS AND THE INTERFACE BETWEEN THESE ITEMS/SYSTEMS AND THE BUILDING STRUCTURE. THE MANUFACTURER/SUPPLIER AND ITS SPECIALTY STRUCTURAL ENGINEER REMAIN RESPONSIBLE FOR THE DESIGN OF THE ITEM/SYSTEM WILL RETAIN ALL RIGHTS AND RESPONSIBILITIES FOR THE DESIGN OF THE PRODUCT AND THE CONNECTIONS TO THE BUILDING STRUCTURE.

   NO WORK ON STRUCTURAL ELEMENTS SUPPORTING OR RELATED TO THESE ITEMS IS TO PROCEED UNLESS THE REVIEW STAMP CLEARLY INDICATES "REVIEWED" OR "REVIEWED, SEE COMMENTS" BY THE ENGINEER.

4. FOLLOWING DEFERRED SUBMITTALS (SHOP DRAWINGS) ARE TO BE PROVIDED FOR APPROVAL:
   - A. CONCRETE MIXES
   - B. CONCRETE TILT WALL PANELS
   - C. REINFORCING STEEL
   - D. STRUCTURAL STEEL
   - E. STEEL JOISTS
   - F. METAL DECKING

   SHOP DRAWINGS ARE TO BE DISTRIBUTED ONLY FROM RETURNED SUBMITTALS BEARING AN INITIALED REVIEW STAMP AND WORK ON THESE ITEMS SHALL NOT PROCEED UNLESS THE STAMP CLEARLY INDICATES THE DRAWINGS ARE "APPROVED" OR "APPROVED AS NOTED."

5. CONCRETE IS A MATERIAL DESIGNED BY THE SUPPLIER TO MEET THE STRENGTH AND PERFORMANCE CRITERIA SPECIFIED IN THE CONTRACT DOCUMENTS. CONCRETE MIX DESIGNS SHALL BE IN CONFORMANCE WITH ACI 318. SUBMIT MIX DESIGNS AND THE TESTING LAB REVIEW TO THE ARCHITECT/ENGINEER FOR REVIEW.

   MANY VARIABLES, INCLUDING ENVIRONMENTAL CONDITIONS AFFECT THE QUALITY OF CONCRETE. THE CONTRACTOR IS RESPONSIBLE FOR CONTROLLING VARIABLES AND REQUESTING MIX MODIFICATIONS AND SHALL BE SOLELY RESPONSIBLE FOR THE QUALITY OF CONCRETE DELIVERED AND PLACED ON THE SITE.

6. BEFORE SUBMISSION FOR REVIEW, GENERAL CONTRACTOR SHALL PRE-CHECK SUBMITTALS. SUBMITTALS MUST BEAR AN INITIALED REVIEW STAMP OF THE GENERAL CONTRACTOR. SUBMITTALS WITHOUT REVIEW STAMPS WILL BE RETURNED WITHOUT REVIEW AND SHALL NOT BE CAUSE FOR CLAIMS OF DELAY.

7. SCHEDULE SUBMITTALS SUFFICIENTLY IN ADVANCE OF THE DATE REQUIRED TO ALLOW REASONABLE TIME FOR PROCESSING AND REVIEW BY THE DESIGN TEAM. THIS SHALL INCLUDE A MINIMUM OF TEN WORKING DAYS FOR ENGINEER'S PROCESSING AND REVIEW. INCLUDE TIME FOR CONTRACTOR'S RESUBMISSION AND SUBSEQUENT REVIEW IF NECESSARY.

   SHORTER REVIEW PERIODS WILL ONLY BE HONORED WITH PRIOR WRITTEN CONSENT. THESE ACCELERATED SERVICES, AND APPROPRIATE COMPENSATION, MUST BE NEGOTIATED WITH THE ENGINEER AND ARCHITECT IN ADVANCE.

   TEN DAY REVIEW PERIODS CAN NOT BE HONORED WHEN LARGE QUANTITIES OF SHOP DRAWINGS ARE SUBMITTED AT ONE TIME. WHEN THIS HAPPENS, THE CONTRACTOR SHALL SUBMIT AN ITEMIZED LIST INDICATING PRIORITIES AND REASONABLE RETURN DATES.

   REVIEW OF RESUBMITTALS WILL BE LIMITED TO ONLY EARLIER COMMENTS AND IS NOT AN EXTENSIVE REVIEW.

8. USE OF REPRODUCTIONS OF THESE CONTRACT DRAWINGS, INCLUDING THE USE OF ELECTRONIC FILES, BY ANY CONTRACTOR IN LIEU OF THE INDEPENDENT PREPARATION OF SHOP DRAWINGS, SIGNIFIES THEIR ACCEPTANCE OF ALL INFORMATION SHOWN HEREON AS CORRECT AND OBLIGATES HIMSELF TO ANY JOB EXPENSE, REAL OR IMPLIED, ARISING DUE TO ANY ERRORS THAT MAY OCCUR HEREON.

GENERAL NOTES

1. PROJECT SPECIFICATIONS ARE A PART OF THE CONTRACT DOCUMENTS. CONTRACTOR SHALL REVIEW THE SPECIFICATIONS AND NOTIFY ARCHITECT OF DISCREPANCIES BEFORE PROCEEDING WITH WORK.

2. STRUCTURAL DRAWINGS ARE AN INTEGRAL COMPONENT TO THE CONTRACT DOCUMENTS. CONTRACTOR SHALL REVIEW AND COORDINATE ACCORDINGLY.
   - A. PRIOR TO FABRICATION OR INSTALLATION OF STRUCTURAL MEMBERS, CONTRACTOR SHALL COMPARE STRUCTURAL DIMENSIONS AND SECTIONS WITH ARCHITECTURAL DIMENSIONS AND SECTIONS. DISCREPANCIES ARE TO BE REPORTED IN WRITING TO THE ARCHITECT.
   - B. PRINCIPAL OPENINGS ARE SHOWN ON THESE DRAWINGS. REFER TO ARCHITECTURAL, MECHANICAL, PLUMBING AND ELECTRICAL DRAWINGS FOR OTHER OPENINGS NOT SHOWN.
   - C. REFER TO ARCHITECTURAL DRAWINGS FOR ELEVATIONS AND LOCATIONS OF SLAB DEPRESSIONS AND CURBS NOT SHOWN. PROVIDE POSITIVE SLOPE TO ALL DRAINS.
   - D. CONTRACTOR SHALL COORDINATE PENETRATIONS, SLEEVES, CURBS, AND INSERTS REQUIRED FOR THE CONTRACT DOCUMENTS.
   - E. CONTRACTOR SHALL VERIFY SIZE, WEIGHT, LOCATION, AND SUPPORT CONDITIONS OF MECHANICAL EQUIPMENT SUPPORTED ON OR SUSPENDED FROM THE ROOF OR FLOORS.
   - F. CONTRACTOR SHALL COORDINATE CONSTRUCTION WITH ADJACENT STRUCTURES AND UTILITIES.
   - G. CONTRACTOR SHALL NOTIFY IN WRITING THE ARCHITECT & ENGINEER OF ANY DISCREPANCIES BEFORE PROCEEDING WITH WORK.

3. EXISTING CONDITIONS MAY BE CONCEALED. CONTRACTOR SHALL NOTIFY THE ARCHITECT AND ENGINEER IN WRITING OF DISCREPANCIES BETWEEN EXISTING CONDITIONS AND CONTRACT DOCUMENTS OR ITEMS SUCH AS CORROSION, ROT, DELAMINATION, OR CRACKS WHICH MAY ADVERSELY AFFECT CONSTRUCTION.

4. DIMENSIONS TO EXISTING OR ADJACENT CONSTRUCTION ARE BASED ON THE ORIGINAL CONSTRUCTION DOCUMENTS AND/OR APPROXIMATE FIELD MEASUREMENTS. THEY ARE TO BE USED FOR BID PURPOSES ONLY AND NOT FOR SHOP DRAWING PREPARATION OR CONSTRUCTION. FIELD MEASUREMENTS SHALL BE USED TO INSURE PROPER FIT UP OF FRAMING MEMBERS.

5. TEMPORARY SHORING AND BRACING DURING CONSTRUCTION
   - A. CONTRACTOR SHALL PROVIDE TEMPORARY BRACING OF COMPONENTS DURING CONSTRUCTION TO MEET REGULATORY REQUIREMENTS FOR SAFETY.
   - B. CONTRACTOR SHALL PROVIDE TEMPORARY SHORING AND BRACING OF WALLS AND GRADE BEAMS DURING CONSTRUCTION. SHORE WALLS AND GRADE BEAMS DURING THE BACKFILLING AND COMPACTION PROCESS.
   - C. CONTRACTOR SHALL PROVIDE NECESSARY TEMPORARY BRACING AND SHORING DURING CONSTRUCTION UNTIL STRUCTURAL FRAMING AND DIAPHRAGMS ARE COMPLETED. TEMPORARY BRACING SHALL BE DESIGNED UNDER THE SUPERVISION OF A LICENSED ENGINEER.

6. SELECTION OF CONSTRUCTION MEANS, METHODS, TECHNIQUES, AND PROCEDURES, AS WELL AS SAFETY PRECAUTIONS AND PROGRAMS, ARE SOLELY THE CONTRACTOR'S RESPONSIBILITIES. AS SUCH, CONSTRUCTION ENGINEERING AND DESIGN RESULTING FROM THESE SELECTIONS IS THE RESPONSIBILITY OF THE CONTRACTOR.
   - A. EXAMPLES INCLUDE, BUT ARE NOT LIMITED TO, ENGINEERING OF SHORING AND SCAFFOLDING SYSTEMS; LOAD CHECKS AND STRUCTURAL MODIFICATIONS FOR STORAGE, STAGING, AND CONSTRUCTION EQUIPMENT LOADING; MEANS OF EGRESS FOR HEAVY EQUIPMENT; CRANE SELECTION, LOCATION, SUPPORT AND BRACING; TEMPORARY HOISTS, LIFTS AND PLATFORMS.
   - B. CONTRACTOR SHALL ENSURE THAT APPROPRIATE ENGINEERING IS PERFORMED BY A LICENSED ENGINEER FOR THE WORK, CONSULTED WITH ON FIELD MODIFICATIONS, SPECIFY APPROPRIATE LEVELS OF INSPECTION OF THE WORK, AND TO REVIEW INSPECTION REPORTS.
   - C. CONSTRUCTION ENGINEERING FEES HAVE NOT BEEN INCLUDED IN THE BASE FEE TO THE OWNER/ARCHITECT. IF REQUESTED, THE EOR MAY CONSIDER PERFORMING THESE SERVICES AS AN ADDITIONAL SERVICE PAID BY THE CONTRACTOR.

7. PRE-CONSTRUCTION MEETINGS SHALL BE CONDUCTED TO DISCUSS SUBGRADE PREPARATION, FOUNDATION CONSTRUCTION, WALL BACKFILL, VOID FORM SYSTEMS, CONCRETE FORMING & PLACING, AND TESTING & INSPECTION REQUIREMENTS.

8. CONTRACTOR SHALL COMPLY WITH REQUIREMENTS AS LISTED IN THE STATEMENT OF SPECIAL INSPECTIONS.

GEOTECHNICAL INFORMATION

1. FOUNDATION DESIGN AND SUBSURFACE INFORMATION IS BASED ON GEOTECHNICAL REPORT #B2109330 PREPARED FOR THIS PROJECT BY BRAUN INTERTEC AND DATED OCTOBER 29, 2021.

2. GEOTECHNICAL ENGINEER OF RECORD (GER) IS SOLELY RESPONSIBLE FOR ESTABLISHING FOUNDATION, SLAB-ON-GRADE AND PAVEMENT DESIGN CRITERIA, AND FOR THE CONSTRUCTION RECOMMENDATIONS FOR EXCAVATION, SUBGRADE PREPARATION, BACKFILLING AND COMPACTION.

3. GEOTECHNICAL INFORMATION INDICATED IN THE STRUCTURAL CONSTRUCTION DOCUMENTS IS INTENDED TO REPLICATE THE RECOMMENDATIONS STATED IN THE GEOTECHNICAL ENGINEERING REPORT. PRESENTATION OF THIS INFORMATION IN THE STRUCTURAL DOCUMENTS DOES NOT DEMONSTRATE, STATE OR IMPLY GEOTECHNICAL EXPERTISE BY THE STRUCTURAL ENGINEER. CONTRACTOR SHALL OBTAIN A COPY OF THE REPORT AND COMPLY WITH THE RECOMMENDATIONS INDICATED THEREIN.

4. IF DISCREPANCIES BETWEEN THE REPORT AND CONSTRUCTION DOCUMENTS ARE DISCOVERED, THE REPORT SHALL GOVERN. ALL CLARIFICATIONS AND INTERPRETATIONS OF THE REPORT SHALL BE MADE BY THE GER AND REPORTED TO THE ARCHITECT FOR COORDINATION WITH THE DESIGN TEAM.

SHALLOW FOUNDATION NOTES

1. BEARING STRATA SHOWN ON THE DETAILS IS NATURAL COHESIVE SOILS. PREPARE FOUNDATION BEARING MATERIAL PER THE GEOTECHNICAL ENGINEER'S RECOMMENDATIONS.

2. FOUNDATION ALLOWABLE DESIGN SOIL VALUES:

   CONTINUOUS FOOTING BEARING - 2.4 ksf
   ISOLATED FOOTING BEARING - 3.0 ksf

3. ALL FOOTING EXCAVATIONS SHALL BE CLEANED TO REMOVE ALL LOOSE SOIL MATERIAL AND OTHER DEBRIS AND SHOULD NOT BE ALLOWED TO DESICCATE PRIOR TO PLACEMENT OF CONCRETE.

4. CONCRETE FOR FOUNDATIONS MAY BE EARTH FORMED ON THE SIDES. EARTH FORMED FOUNDATIONS SHALL BE A NEAT VERTICAL CUT, WITH NO LOOSE SPOIL OR DEBRIS IN THE BOTTOM OF THE CUT. SIGNIFICANT SLOUGHING OR OVER EXCAVATIONS WILL REQUIRE FORMWORK.

5. ALL FOUNDATION EXCAVATIONS SHALL BE INSPECTED BY THE TESTING AGENCY.

TRENCH SAFETY

1. THE CONTRACTOR SHALL PROVIDE TRENCH SAFETY DESIGN DOCUMENTS PREPARED AND SEALED BY A QUALIFIED REGISTERED PROFESSIONAL ENGINEER AS REQUIRED BY ALL LOCAL AND STATE LAWS. SAID ENGINEER SHALL ALSO BE RESPONSIBLE FOR ON SITE OBSERVATIONS. THE TRENCH SAFETY DESIGN DOCUMENTS SHALL BE FILED WITH THE APPROPRIATE GOVERNMENT AGENCY. THE CONTRACTOR SHALL FURNISH A SEPARATE AND DISTINCT PRICE FOR TRENCH SAFETY SYSTEM THAT MEETS OCCUPATIONAL SAFETY & HEALTH ADMINISTRATION STANDARDS.

DESIGN DATA

1. THE DESIGN OF THE STRUCTURE AND PARTS THEREOF IS IN ACCORDANCE WITH THE 2021 INTERNATIONAL BUILDING CODE, AS AMENDED AND ADOPTED BY THE CITY OF PORT ARTHUR, TEXAS.

2. ROOF LIVE LOADS:

AREA	UNIFORM	SPECIAL COMMENTS	LIVE LOAD REDUCTION
ROOF, GENERAL	20 psf	-	YES, PER IBC 1607.13.2
ROOF, EQUIP LOADS		SEE ROOF PLAN	

3. WIND DESIGN DATA:

BASIC WIND SPEDD (3 SECOND GUST)	142 mph
ASD WIND SPEED V_{asd}	110 mph
RISK CATEGORY	II
WIND EXPOSURE	D
INTERNAL PRESSURE COEFFICIENT	+/- 0.55
COMPONENTS AND CLADDING	PER ASCE 7-16

FACTORED COMPONENTS AND CLADDING WALL LOADS				
	POSITIVE PRESSURE (PSF)		NEGATIVE PRESSURE (PSF)	
AREA (SQ FT)	INTERIOR ZONE (PSF)	CORNER ZONE (PSF)	INTERIOR ZONE (PSF)	CORNER ZONE (PSF)
LESS THAN 10	71.6	71.6	-76.3	-90.1
50	67.0	67.0	-74.0	-85.5
200	64.7	64.7	-64.7	-69.3
GREATER THAN 500	57.8	57.8	-49.3	-45.3

CORNER ZONE IS A DISTANCE OF 7'-0" FROM WALL CORNERS
LINEAR INTERPOLATE FOR LOADS BETWEEN SPECIFIED AREAS

FACTORED COMPONENTS AND CLADDING ROOF LOADS								
	POSITIVE PRESSURE (psf)				NEGATIVE PRESSURE (psf)			
AREA (SQ FT)	ZONE 1'	ZONE 1	ZONE 2	ZONE 3	ZONE 1'	ZONE 1	ZONE 2	ZONE 3
LESS THAN 10	39.3	39.3	39.3	39.3	- 67.0	- 104.0	- 131.7	- 173.3
100	34.7	34.7	34.7	34.7	- 67.0	- 85.5	- 108.6	- 122.5
200	34.7	34.7	34.7	34.7	- 60.1	- 78.6	- 99.4	-108.6
GREATER THAN 500	34.7	34.7	34.7	34.7	- 50.8	- 71.6	- 90.1	- 90.1

INTERIOR ZONE, "A" IS A DISTANCE OF 21'-0" FROM EDGE OF BUILDING
PERIMETER ZONE, "B" IS A DISTANCE OF 10'-6" FROM EDGE OF BUILDING
CORNER ZONE, "C" IS A DISTANCE OF 3'-6" FROM EDGE OF BUILDING
LINEAR INTERPOLATE FOR LOADS BETWEEN SPECIFIED AREAS

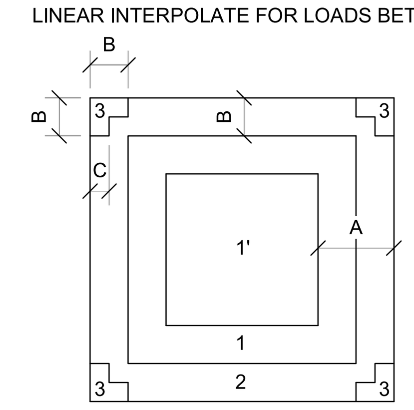

4. SEISMIC DESIGN DATA:

RISK CATEGORY	II
SEISMIC IMPORTANCE FACTOR, I_e	1.0
MAPPED SPECTRAL RESPONSE ACCEL.	S_s = 0.076 S_1 = 0.044
SITE CLASS	E
SPECTRAL RESPONSE COEFFICIENTS	S_{DS} = 0.122 S_{D1} = 0.124
SEISMIC DESIGN CATEGORY	A
BASIC SEISMIC-FORCE-RESISTING SYSTEM	ORDINARY REINFORCED CONCRETE SHEAR WALLS
DESIGN BASE SHEAR	2.85 kips
SEISMIC RESPONSE COEFFICIENT, C_s	0.01
RESPONSE MODIFICATION FACTOR, R	4
ANALYSIS PROCEUDRE USED	ASCE 7-10, CATEGORY A

5. FLOOD DESIGN DATA:

THIS PROJECT IS NOT LOCATED WITHIN A FLOOD HAZARD AREA

City of Port Arthur Texas

TBPE FIRM #22626

KSA
1111 Hawn Avenue
Shreveport, LA 71107
T.318.221.7501 F.318.221.7635
www.ksaeng.com
TBPE Firm Registration No. F-1356
03/27/2024

RLG CONSULTING ENGINEERS
PROJECT #2115.165
12001 N. CENTRAL EXPRESSWAY, SUITE 300
DALLAS, TEXAS 75243 214-739-8100
www.rlginc.com FIRM REG: F-493

COPYRIGHT
ALL REPORTS, PLANS, SPECIFICATIONS, COMPUTER FILES, FIELD DATA, NOTES AND OTHER DOCUMENTS AND ANY INSTRUMENTS PREPARED BY KSA. AS INSTRUMENTS OF SERVICE SHALL REMAIN THE PROPERTY OF KSA. KSA SHALL RETAIN ALL COMMON LAW, STATUTORY AND OTHER PRESERVED RIGHTS, INCLUDING THE COPYRIGHT THERETO. COPYING OR REPRODUCTION OF INSTRUMENTS OF SERVICE WITHOUT THE EXPRESS CONSENT OF KSA IS STRICTLY PROHIBITED.

NO.	DATE	REVISION

GENERAL NOTES:

STATE OF TEXAS
JOHN BRENT JACKSON
84498
LICENSED
PROFESSIONAL ENGINEER

DATE: DEC 2025

PROJECT TITLE:
PORT ARTHUR TRANSIT PARKING LOT

DRAWING TITLE:
GENERAL NOTES

DRAWING NUMBER: S1.01

SHEET NUMBER: 37 SHEET TOTAL: 59

SCALE: 12" = 1'-0"

DRAWN BY: JCG CHECKED BY: JBJ

STEEL JOIST NOTES

1. STEEL JOISTS SHALL CONFORM TO THE REQUIREMENTS OF THE STANDARD SPECIFICATIONS AND LOAD TABLE FOR OPEN WEB STEEL JOISTS, ADOPTED BY THE STEEL JOIST INSTITUTE LATEST EDITION.

2. JOIST MANUFACTURER SHALL BE A MEMBER OF THE STEEL JOIST INSTITUTE. JOIST ERECTION SHALL CONFORM TO ALL APPLICABLE SAFETY STANDARDS.

3. WHEN SPECIAL JOISTS ARE INDICATED ON PLAN (SP), COMPLY WITH THE STANDARD SPECIFICATIONS AND SPECIAL DESIGN CRITERIA AS NOTED ON THE DRAWINGS. SPECIAL DESIGN CRITERIA MAY INCLUDE LOADING, END MOMENTS, WIND UPLIFT, DEFLECTION LIMITS, MAXIMUM WIDTHS, SPECIAL BRIDGING, BOTTOM CHORD BRACING, CHORD STIFFENERS, BEARING CONDITIONS, SPECIAL SEATS, SPECIAL CHORD CONFIGURATIONS, CLEARANCE FOR DUCTS THROUGH MEMBERS, ETC. PROVIDE ALL ACCESSORIES REQUIRED TO COMPLY WITH THE STANDARD SPECIFICATIONS AND THE DESIGN CRITERIA.

4. DESIGN ALL JOISTS TO RESIST NET WIND UPLIFT FORCES (ASD) AS FOLLOWS:
   CORNER ZONE: 55.2 psf
   PERIMETER ZONE: 49.6 psf
   INTERIOR ZONE: 33.0 psf
   REFER TO PLANS FOR ANY SPECIAL CONDITIONS

5. ALL HANGERS SUPPORTING MECHANICAL EQUIPMENT, ETC., FROM THE BOTTOM CHORD OF STEEL JOISTS SHALL BE LOCATED AT THE PANEL POINTS OF THE JOISTS.

6. EXTEND BOTTOM CHORDS OF ALL JOISTS CENTERED ON COLUMNS AND WELD THE BOTTOM CHORDS TO THE COLUMNS AND/OR WALLS EACH END. DO NOT CONNECT BOTTOM CHORDS OF JOISTS TO THE COLUMNS UNTIL THE ROOF (AND/OR) FLOOR DEAD LOAD IS APPLIED.

7. PROVIDE BOTTOM CHORD CEILING EXTENSIONS WHERE REQUIRED BY ARCHITECTURAL DETAILS.

8. JOIST BRIDGING SHALL BE FURNISHED AND INSTALLED TO MEET THE DESIGN AND SPACING REQUIREMENTS OF THE STEEL JOIST INSTITUTE SPECIFICATIONS FOR OPEN WEB JOISTS. PROVIDE BOLTED DIAGONAL BRIDGING FOR ERECTION STABILITY AS REQUIRED BY THE STANDARD SPECIFICATIONS, THE GOVERNING BUILDING CODE AND/OR OSHA. PROVIDE ADDITIONAL BRIDGING AS REQUIRED BY DESIGN TO RESIST WIND UPLIFT FORCES INDICATED IN NOTES OR ON DRAWINGS, INCLUDING A SINGLE LINE OF BOTTOM CHORD BRIDGING NEAR THE FIRST BOTTOM CHORD PANEL POINT AT EACH END OF JOISTS.

9. DEPTH OF JOISTS SEATS SHALL BE 2 1/2" FOR SHORT SPAN JOISTS AND 5" FOR LONG SPAN JOISTS UNLESS SHOWN OTHERWISE ON THE DRAWINGS.

10. PROVIDE DOUBLE ANGLES IN LIEU OF RODS FOR BOTTOM CHORD OF ALL JOISTS.

11. JOISTS SHALL BE WELDED TO SUPPORTING STEEL MEMBERS.

12. PROVIDE FLAT BEARING FOR ALL JOISTS.

13. THE FOLLOWING MINIMUM BEARING LENGTHS PARALLEL TO THE LENGTH OF THE JOIST SHALL BE PROVIDED PER SJI STANDARD SPECIFICATIONS.

    BEARING ON STEEL 2 1/2"
    BEARING ON CONC OR MASONRY W/BEARING PLATE 4"

14. WHERE END ANCHORAGE FOR JOISTS ARE NOT SHOWN OR NOTED, THE FOLLOWING MINIMUM ANCHORAGES SHALL BE PROVIDED:

    STEEL SUPPORTS:

    TWO 1/8" FILLET WELDS x 1" LONG OR EQUIVALENT WELD

    OR

    TWO 1/2" DIA A325 BOLTS.

    CONC OR MASONRY SUPPORTS:

    TWO 1/2" DIA x 6" LONG HEADED STUD ANCHORS WELDED TO STEEL BEARING PLATE AND FULLY EMBEDED IN CONC OR SOILD MASONRY UNIT.

15. JOISTS SHALL BE CAMBERED THE MINIMUM RECOMMENDED CAMBER AS INDICATED IN THE STEEL JOIST INSTITUTE SPECIFICATIONS.

16. WHERE JOISTS ARE UTILIZED, AND COLUMNS ARE NOT FRAMED IN AT LEAST TWO DIRECTIONS WITH STRUCTURAL STEEL MEMBERS, A JOIST SHALL BE FIELD BOLTED AT COLUMNS (EACH END OF JOIST) TO PROVIDE LATERAL STABILITY DURING CONSTRUCTION.

17. DAMAGED JOISTS WILL BE REJECTED. THE CONTRACTOR AND THE JOIST MANUFACTURER SHALL BE RESPONSIBLE FOR REPAIRING AND/OR REPLACING DAMAGED JOISTS. ALL REPAIRS SHALL BE ENGINEERED BY THE JOIST MANUFACTURER AND REPAIR DETAILS, SIGNED AND SEALED BY A REGISTERED ENGINEER (IN THE STATE OF THE PROJECT) SHALL BE SUBMITTED TO THE ARCHITECT AND ENGINEER FOR REVIEW. AN INDEPENDENT TESTING LAB SHALL INSPECT ALL REPAIRS. AFTER SUCCESSFUL COMPLETION OF THE REPAIR WORK, THE JOIST MANUFACTURER SHALL SUBMIT THE TESTING AGENCY'S REPORTS ALONG WITH A LETTER STATING THAT THE DAMAGED MEMBERS HAVE BEEN SATISFACTORILY REPAIRED.

18. HANGERS AND OTHER SUPPORTS FOR MECHANICAL, ELECTRICAL, PLUMBING, ETC SHALL BE LOCATED AT THE INTERSECTION OF THE CHORD AND WEB (PANEL POINT). CONCENTRATED LOADS IN EXCESS OF 200 LBS MUST BE APPROVED BY THE ENGINEER OF RECORD.

19. ALL PIPING LARGER THAN 4", PARALLEL TO JOISTS, SHALL BE HUNG FROM A MINIMUM OF TWO JOISTS, AND SUPPORTS SHALL BE ATTACHED AT PANEL POINTS ONLY.

METAL ROOF DECK NOTES

1. ROOF METAL DECK SHALL BE 1 1/2" DEEP, 22 GAGE WIDE RIB GALVANIZED (G60) METAL DECK. (VULCRAFT TYPE 1.5 B 22 OR EQUIVALENT.)

   A. DECK SHALL BE INSTALLED IN 2-SPAN AND 3-SPAN LENGTHS ONLY. NO 1-SPAN CONDITIONS WILL BE ALLOWED.

   B. DECK CONNECTIONS SHALL BE AS FOLLOWS (UNLESS NOTED OTHERWISE ON PLAN):

      1. SIDELAPS: #10 TEK SCREWS AT 18" (INTERIOR ZONE)
      2. SIDELAPS: #10 TEK SCREWS AT 9" (PERIMETER ZONE)
      3. AT SUPPORTS: PUDDLE WELDS AT 12" O.C. (INTERIOR ZONE)
      4. AT SUPPORTS: PUDDLE WELDS AT 6" O.C. (PERIMETER ZONE)

   C. PUDDLE WELDS SHALL BE 5/8" DIAMETER FULL FUSION (MINIMUM). ALL WELDS SHALL BE MADE WITH A.W.S. E70 ELECTRODES AND METAL AROUND WELDS SHALL BE COMPLETELY INTACT AFTER WELDING.

2. SUSPENDED CEILINGS, LIGHT FIXTURES, DUCTS OR OTHER UTILITIES SHALL NOT BE SUPPORTED BY THE STEEL DECKS.

TILT UP WALL PANEL NOTES

1. TYPICAL PANELS ARE 7 1/4" THICK AS SHOWN ON DRAWINGS. REVEALS AND FORM LINERS SHALL NOT EXCEED ¼" IN DEPTH EXCEPT AS NOTED ON STRUCTURAL DRAWINGS.

2. TYPICAL PANELS REINFORCING SHALL BE AS SHOWN ON THE PANEL ELEVATIONS.

3. PANEL ELEVATIONS ARE DIAGRAMMATIC AND DEPICT PANEL CONFIGURATION. REFER TO ARCHITECTURAL DRAWINGS FOR DIMENSIONS, OPENINGS, AND ADDITIONAL EMBEDDED ITEMS.

4. ADD 2-#5 EACH FACE AROUND ALL OPENINGS. EXTEND BARS 2'-0" PAST OPENINGS UNLESS NOTED OTHERWISE.

5. SEE STRUCTURAL DETAILS FOR ALL DOWELS TO SLAB, CONNECTIONS FOR STEEL BEAMS, ANCHORS, JOISTS, AND FOR SUPPORTING METAL DECK.

6. SEE ARCHITECTURAL DRAWINGS FOR REVEALS, CHAMFERS, SPECIAL FINISHES, AS WELL AS INSERTS REQUIRED FOR ARCHITECTURAL ITEMS.

7. CONCRETE STRENGTH AT LIFTING SHALL BE 75% OF DESIGN STRENGTH OR 2250 psi, WHICHEVER IS GREATER. CONCRETE SHALL ACHIEVE FULL DESIGN STRENGTH PRIOR TO PLACING CONCRETE ON FLOOR DECKS (IF ANY). FLY ASH SHALL NOT BE USED IN THE CONCRETE MIX USED FOR PANELS.

8. ALL LIFTING INSERTS AND ADDITIONAL REINFORCING REQUIRED FOR LIFTING OF PANELS IS THE RESPONSIBILITY OF THE CONTRACTOR AND SPECIALTY ENGINEER.

9. DESIGN AND INSTALLATION OF ALL TEMPORARY BRACING FOR CONCRETE PANELS IS THE RESPONSIBILITY OF THE CONTRACTOR. BRACING SHALL REMAIN IN PLACE UNTIL THE ROOF DIAPHRAGM HAS BEEN COMPLETED. BRACING SYSTEMS SHALL BE FULLY COORDINATED WITH THE ERECTION SEQUENCE OF STRUCTURAL STEEL AND METAL DECK. PARTIALLY COMPLETED STEEL FRAMES SHALL NOT BE USED AS PANEL BRACING.

10. WHERE WALL PANELS RETAIN A DIFFERENCE IN GRADE OF 4'-0" OR MORE, TEMPORARY BRACING IS REQUIRED DURING THE BACKFILL OPERATION UNTIL THE FLOOR SLAB HAS BEEN DOWELED TO THE PANEL AND IT HAS REACHED DESIGN STRENGTH.

11. SHOP DRAWINGS SHALL SHOW THE DETAILS AND LOCATIONS OF ALL EMBED ITEMS, REINFORCING, AND ERECTION REQUIREMENTS. PANEL ELEVATIONS INDICATING REINFORCING STEEL AND EMBEDDED STEEL PLACEMENT ARE REQUIRED. THE CONTRACTOR SHALL COORDINATE THE SUBMITTAL PROCESS TO ENSURE THAT ALL TRADES HAVE BEEN INCLUDED IN THE PROCESS AND ALL EMBEDDED ITEMS ARE SHOWN.

12. PRIOR TO CASTING OF PANEL, EMBEDS AND ANCHORS THAT SUPPORT BEAMS, JOISTS AND JOIST GIRDERS SHALL BE SECURELY ANCHORED IN PLACE AND THEIR LOCATION CAREFULLY CHECKED. "WET SETTING" OR FLOATING THESE EMBEDS WILL NOT BE ALLOWED. PROVIDE ¼" DIAMETER AIR HOLES IN LARGE EMBED PLATES, AS SHOWN ON EMBED PLATE SCHEDULE, TO ALLOW AIR TO ESCAPE FROM UNDER THE PLATE DURING CONCRETE PLACEMENT. CAREFULLY VIBRATE AROUND THE EMBEDS TO THOROUGHLY CONSOLIDATE CONCRETE AROUND HEADED STUDS AND ELIMINATE HONEYCOMBS. INSPECT AIR HOLES TO ENSURE THAT CONCRETE IS IN CONTACT WITH THE BACK OF PLATE. SIZE, TYPE AND POSITION OF THESE EMBEDS SHALL BE INSPECTED BY THE TESTING LAB PRIOR TO POUR.

13. CONTRACTOR SHALL CONDUCT A PRE-CONSTRUCTION MEETING TO DISCUSS THE SUBMITTAL PROCESS, CASTING, ERECTION AND BRACING WORK, AND INSPECTION REQUIREMENTS. ATTENDANCE WILL BE REQUIRED BY THE CONTRACTOR, PERTINENT SUB CONTRACTORS, AND THE TESTING LABORATORY. NOTIFY THE ARCHITECT, ENGINEER AND OWNER ONE WEEK PRIOR TO THE MEETING (THEIR ATTENDANCE IS OPTIONAL).

STRUCTURAL STEEL NOTES

1. STRUCTURAL STEEL SHALL CONFORM TO AISC "SPECIFICATION FOR STRUCTURAL STEEL BUILDINGS," ANSI/AISC 360, LATEST EDITION.

2. BOLTS AND BOLTED CONNECTIONS SHALL CONFORM TO THE REQUIREMENTS OF THE "SPECIFICATION FOR STRUCTURAL JOINTS USING ASTM A325 OR A490 BOLTS," APPROVED BY THE RESEARCH COUNCIL ON STRUCTURAL CONNECTIONS, LATEST EDITION. CONNECTIONS SHALL BE BEARING TYPE UNLESS NOTED OTHERWISE IN DRAWINGS.

3. ALL W SHAPES SHALL CONFORM TO ASTM A992.

   ALL OTHER STRUCTURAL STEEL SHAPES, PLATES, ETC., SHALL CONFORM TO ASTM A36, UNLESS NOTED OTHERWISE.

4. ALL STRUCTURAL STEEL TUBE MEMBERS SHALL CONFORM TO ASTM A500, GRADE C.

5. ALL STRUCTURAL STEEL PIPE SHALL CONFORM TO ASTM A53, GRADE B.

6. ALL STRUCTURAL ROUND SHAPES SHALL CONFORM TO ASTM A53, GRADE B.

7. GALVANIZING OF STEEL MEMBERS SHALL CONFORM TO ASTM A123/A123M. ALL STEEL FRAMING THAT COMES IN CONTACT WITH PRESSURE TREATED WOOD SHALL BE COATED TO A G90 THICKNESS AND ALL BOLTS, HEADED STUDS AND CONNECTORS SHALL BE COATED TO A G185 THICKNESS. ALL EXPOSED STRUCTURAL STEEL FRAMING AND ACCESSORIES FOR MECHANICAL EQUIPMENT SUPPORTS SHALL BE HOT-DIP GALVANIZED AFTER FABRICATION. CONTRACTOR TO PROVIDE BOLTS AND PUNCH BEAMS AS REQUIRED BY EQUIPMENT MANUFACTURER'S DETAILS.

8. ALL STRUCTURAL STEEL DETAILS AND CONNECTIONS SHALL CONFORM TO THE STANDARDS OF THE AISC.

9. STEEL MEMBERS SHALL NOT BE SPLICED EXCEPT WHERE SHOWN ON THE DRAWINGS.

10. ALL STEEL BEAMS SHALL BE ERECTED WITH NATURAL CAMBER UP.

11. NON-COMPOSITE: THE BEAM-TO-BEAM AND BEAM-TO-COLUMN CONNECTIONS SHALL DEVELOP THE END REACTION OF THE CONNECTED BEAM. THE END REACTION OF THE CONNECTED BEAM CAN BE OBTAINED FROM THE LOAD CARRYING CAPACITY OF THE BEAM ON THE BASIS OF EQUIVALENT UNIFORM LOADS GIVEN IN PART 3 (FLEXURAL MEMBERS) OF THE AISC MANUAL. THE MINIMUM SHEAR CAPACITY OF THE 12 KIPS SHALL BE PROVIDED FOR ALL BEAMS 8" TO 10" DEEP WITH 8 KIPS FOR BEAMS OF DEPTH LESS THAN 8". ANY REACTIONS GIVEN ON THE DRAWINGS SUPERSEDE THIS NOTE. CONNECTIONS SHALL BE DESIGNED AND DETAILED AS REQUIRED BY PART 9 (DESIGN OF CONNECTING ELEMENTS) OF THE AISC MANUAL. NON COMPOSITE BEAMS SHALL BE DEFINED AS THOSE REQUIRING NO SHEAR CONNECTORS (HEADED STUDS).

12. WELDED CONSTRUCTION SHALL CONFORM TO THE AMERICAN WELDING SOCIETY "STRUCTURAL WELDING CODE", D1.1. ELECTRODES FOR FIELD AND SHOP WELDS SHALL BE E70XX, UNLESS NOTED OTHERWISE.

13. ALL WELDING SHALL BE PERFORMED BY CERTIFIED WELDERS.

14. FULL AND PARTIAL PENETRATION WELDS PERFORMED IN THE FIELD SHALL BE ULTRASONICALLY TESTED.

15. WHEN WELDS ARE NOT CALLED-OUT ON DRAWINGS, THEY ARE MINIMUM SIZE CONTINUOUS FILLET WELDS IN ACCORDANCE WITH AWS D1.1.

16. THE STEEL FABRICATOR IS RESPONSIBLE FOR COORDINATION WITH THE MANUFACTURER OF STEEL JOISTS AND JOIST GIRDERS.

17. TEMPORARY SUPPORTS, SUCH AS TEMPORARY GUYS, BRACES, FALSEWORK, CRIBBING OR OTHER ELEMENTS REQUIRED FOR THE ERECTION OPERATION WILL BE DETERMINED, FURNISHED, AND INSTALLED BY THE ERECTOR. THESE TEMPORARY SUPPORTS SHALL BE CAPABLE OF SECURING THE STEEL FRAMING, OR ANY PARTLY ASSEMBLED STEEL FRAMING, AGAINST LOADS COMPARABLE IN INTENSITY TO THOSE FOR WHICH THE STRUCTURE WAS DESIGNED, RESULTING FROM WIND, SEISMIC FORCES AND ERECTION OPERATIONS.

18. THE LIFTING AND ERECTION OF PRE-ASSEMBLED ELEMENTS SUCH AS TRUSSES OR PRE-FABRICATED FRAMING ARE CONSIDERED SPECIAL ERECTION CONDITIONS. THE SELECTION OF LIFT POINTS AND ERECTION TECHNIQUES ARE THE RESPONSIBILITY OF THE CONTRACTOR. LOCATE AND PROVIDE SUFFICIENT LIFT POINTS TO PREVENT OVERSTRESS AND/OR DISTORTION OF ANY COMPONENTS WITHIN THE ASSEMBLY. PROVIDE TEMPORARY STRONG-BACKS, STIFFENERS AND/OR LIFTING DEVICES AS REQUIRED.

19. ALL GROUT BELOW ALL COLUMN BASE PLATES AND BEARING PLATES SHALL BE NON-SHRINK, NON-METALLIC GROUT UNLESS NOTED OTHERWISE.

SLAB-ON-GRADE NOTES

1. FLOOR SLAB SHALL BE 6" THICK CONCRETE SLAB OVER SUBGRADE PREPARED PER THE GEOTECHNICAL ENGINEER'S RECOMMENDATIONS.

2. REINFORCE SLAB WITH #4 @ 12" CTRS. EACH WAY PLACED AND SUPPORTED ON CHAIRS OR CONCRETE BRIQUETS, AT SLAB MID DEPTH.

3. PROVIDE ONE OF THE FOLLOWING JOINTS ON THE CENTERLINE OF ALL COLUMNS, AND @ 15' O.C. MAXIMUM.

   A. CONSTRUCTION JOINTS WHERE DETAILED ON DRAWINGS.
   B. SAW CUT CONTROL JOINTS ELSEWHERE 1" DEEP OR ONE QUARTER OF THE SLAB DEPTH DEEP, WHICHEVER IS GREATER.

4. A METAL CONTROL JOINT FORM MAY BE USED IN LIEU OF EITHER OF THE ABOVE.

5. CUT SAW CUT JOINTS WITHIN 8 HOURS OF POURING CONCRETE.

6. CONCRETE FINISHES AND SPRAY ON CURRING / SEALING COMPOUNDS SHALL BE COORDINATED WITH ARCHITECTURAL FLOORING FINISHES FOR COMPATIBILTY.

7. PROVIDE A CONTINUOUS SAW CUT CONTROL JOINT OR CONSTRUCTION JOINT PARALLEL TO, AND 5'-0" INSIDE, THE PERIMETER OF THE BUILDING.

8. THE SLAB ON GRADE HAS BEEN DESIGNED TO FUNCTION AS A FLOOR FOR BUS PARKING TYPE LOADING. THE CONTRACTOR SHALL BE RESPONSIBLE FOR PROVIDING THE CONSTRUCTION ENGINEERING AND STRUCTURAL MODIFICATIONS TO THE SLAB AS NECESSARY TO ACCOMMODATE CONSTRUCTION LOADING DURING TILT WALL CASTING AND ERECTION. THIS SHALL INCLUDE ANY NECESSARY THICKENING OR STIFFENING OF THE CONCRETE SLAB, INCREASES IN SLAB REINFORCEMENT, INCREASES IN CONCRETE STRENGTHS OR USE OF HIGH EARLY STRENGTH CONCRETE, AND PROTECTION OF THE SLAB DURING CASTING AND ERECTION. FLY ASH WILL NOT BE ALLOWED IN CONCRETE USED IN SLABS USED FOR CASTING TILT WALL PANELS.

CONCRETE NOTES

1. ALL CONCRETE WORK SHALL BE IN ACCORDANCE WITH ACI 318- PER GOVERNING BUILDING CODE.

2. CONCRETE IN THE FOLLOWING AREAS SHALL HAVE SAND AND GRAVEL OR CRUSHED STONE AGGREGATES AND THE DESIGNATED COMPRESSIVE STRENGTH IN 28 DAYS UNLESS NOTED OTHERWISE. NORMAL WEIGHT AGGREGATES SHALL CONFORM TO ASTM C33. LIGHTWEIGHT AGGREGATES SHALL CONFORM TO ASTM C330. LIGHTWEIGHT CONCRETE SHALL HAVE A MAXIMUM DRY DENSITY OF 120 pcf.

   SLABS ON GRADE ---------- f'_c = 4,000 psi
   SAHLLOW FOUNDATIO-NS ---------- f'_c = 4,000 psi
   WALL PANELS ---------- f'_c = 4,000 psi
   ALL OTHER CONCRETE ---------- f'_c = 4,000 psi

3. CONCRETE PROTECTION FOR REINFORCEMENT SHALL BE AS FOLLOWS:
   REFER TO ACI 318 - SECTION 7.7 FOR CONDITIONS NOT NOTED.

   SAHLLOW FOUNDATIONS ---------- 1 1/2" TOP
   2" SIDES
   3" BOTTOM
   SLABS-ON-GRADE ---------- CENTERED
   WALL PANELS ---------- 1 1/2"

4. MAXIMUM NOMINAL COARSE AGGREGATE SIZE SHALL BE 1" MAX TYPICAL UNLESS NOTED OTHERWISE.

5. CONCRETE SLUMPS SHALL BE AS FOLLOWS:

   CONCRETE CONTAINING HRWR------ 10" MAX
   ALL OTHER CONCRETE ---------- 5" MAX, 2" MIN

6. CONCRETE EXPOSED TO WEATHER SHALL BE AIR-ENTRAINED AS FOLLOWS:

3/4"	NOMINAL AGGREGATE SIZE	4% TO 8%
1"	NOMINAL AGGREGATE SIZE	3.5% TO 6.5%
1 1/2"	NOMINAL AGGREGATE SIZE	3% TO 6%

7. THERE SHALL BE NO HORIZONTAL CONSTRUCTION JOINTS IN CONCRETE POURS. ALL CONSTRUCTION JOINTS SHALL BE MADE IN THE CENTER OF SPANS WITH VERTICAL BULK HEADS. THE LOCATION OF CONSTRUCTION JOINTS SHALL BE APPROVED BY THE STRUCTURAL ENGINEER.

8. ALL CONSTRUCTION JOINTS SHOWN ON THE DRAWINGS SHALL BE INCORPORATED IN THE STRUCTURE UNLESS OTHERWISE APPROVED BY THE ENGINEER OF RECORD. ADDITIONAL CONSTRUCTION JOINTS REQUIRED TO FACILITATE CONSTRUCTION SHALL BE LOCATED AND DETAILED ON SHOP DRAWINGS. WHEN CONSTRUCTION JOINTS OTHER THAN THOSE SHOWN ON THE CONSTRUCITON DOCUMENTS ARE REQUIRED, THE REINFORCEMENT SHALL PASS CONTINUOUSLY THROUGH JOINT AND A KEY SHALL BE PROVIDED FOR ADEQUATE SHEAR TRANSFER.

9. NO ALUMINUM OF ANY TYPE SHALL BE ALLOWED IN THE CONCRETE WORK, UNLESS COATED AND APPROVED BY THE ENGINEER OR RECORD.

15. NO ELECTRICAL CONDUIT SHALL BE PLACE ABOVE THE REINFORCING IN THE SLAB-ON-GRADE. MAXIMUM SIZE OF CONDUIT SHALL BE 1/3 THE SLAB THICKNESS. CONDUIT SHALL NOT BE PLACED CLOSER THAN 3 DIAMETERS ON CENTER.

REINFORCING STEEL NOTES

1. ALL REINFORCING STEEL SHALL BE NEW DEFORMED BILLET STEEL CONFORMING TO ASTM A615, GRADE 60.

2. ALL WELDED WIRE FABRIC SHALL CONFORM TO ASTM 185.

3. HEADED SHEAR STUDS AND HEADED SHEAR STUD ASSEMBLIES (STUD RAILS) REQUIRED IN CONCRETE BEAMS AND SLABS SHALL COMPLY WITH ACI 3.5.5 AND CONFORM TO ASTM A1044.

4. DETAILING OF REINFORCEMENT SHALL BE IN ACCORDANCE WITH THE ACI DETAILING MANUAL.

5. REINFORCING BARS MAY BE SPLICED ONLY AS SHOWN ON THE DRAWINGS EXCEPT THAT REINFORCING DESIGNATED AS "CONTINUOUS" MAY BE CONTACT LAP SPLICED WITH TENSION LAP PER ACI 318 CHAPTER 12.

6. FOR CONTINUOUS GRADE BEAM REINFORCING, 30 BAR DIAMETERS LAP SPLICES SHALL BE MADE OVER SUPPORTS FOR BOTTOM AND AT MIDSPAN FOR TOP BARS AND INTERMEDIATE BARS. AT GRADE BEAM END SUPPORTS, TOP BARS SHALL BE HOOKED DOWN AND BOTTOM BARS SHALL BE HOOKED UP.

7. PROVIDE CORNERS BARS OF SAME SIZE AND QUANTITY AS CONTINUOUS TOP AND BOTTOM REINFORCING OF GRADE BEAMS AT ALL GRADE BEAM CORNERS AND INTERSECTIONS.

KSA
1111 Hawn Avenue
Shreveport, LA 71107
T.318.221.7501 F.318.221.7635
www.ksaeng.com
TBPE Firm Registration No. F-1356
03/27/2024

RLG CONSULTING ENGINEERS
PROJECT #2115.165
12001 N. CENTRAL EXPRESSWAY, SUITE 300
DALLAS, TEXAS 75243 214-739-8100
www.rlginc.com FIRM REG: F-493

COPYRIGHT
ALL REPORTS, PLANS, SPECIFICATIONS, COMPUTER FILES, FIELD DATA, NOTES AND OTHER DOCUMENTS AND ANY INSTRUMENTS PREPARED BY KSA, AS INSTRUMENTS OF SERVICE SHALL REMAIN THE PROPERTY OF KSA. KSA SHALL RETAIN ALL COMMON LAW, STATUTORY AND OTHER PRESERVED RIGHTS, INCLUDING THE COPYRIGHT THERETO. COPYING OR REPRODUCTION OF INSTRUMENTS OF SERVICE WITHOUT THE EXPRESS CONSENT OF KSA IS STRICTLY PROHIBITED.

City of Port Arthur Texas

TBPE FIRM #22626

NO.	DATE	REVISION

GENERAL NOTES:

STATE OF TEXAS
JOHN BRENT JACKSON
84498
LICENSED
PROFESSIONAL ENGINEER
03/27/24

DATE: DEC 2025

PROJECT TITLE:

PORT ARTHUR TRANSIT PARKING LOT

DRAWING TITLE:

GENERAL NOTES

DRAWING NUMBER: S1.02

SHEET NUMBER: 38 SHEET TOTAL: 59

SCALE: 12" = 1'-0"

DRAWN BY: JCG CHECKED BY: JBJ

C:\Users\bjackson\OneDrive - RLG, Inc\Documents\2115.165_Struct_

PIPING SUPPORT NOTES

1. THE FIRE SPRINKLER AND PLUMBING SUB-CONTRACTOR SHALL PREPARE DETAILS AND CALCULATIONS FOR THE SUPPORT AND BRACING OF PIPING AND RISERS IN CONFORMANCE WITH THE LOCAL BUILDING CODE.

2. PIPING AND RISER SUPPORT AND BRACING DOCUMENTS (DETAILS AND CALCULATIONS) SHALL BE SUBMITTED TO THE MANUFACTURER OF THE PREFABRICATED JOISTS FOR REVIEW AND APPROVAL OF APPLIED LOADS AND SUPPORT CONDITIONS. THE DESIGN OF THE CONNECTIONS TO STRUCTURAL MEMBERS IS THE RESPONSIBILITY OF THE FIRE SPRINKLER AND/OR PLUMBING SUB-CONTRACTOR.

3. PIPING AND RISER SUPPORT AND BRACING DOCUMENTS (DETAILS AND CALCULATIONS) SHALL BE FILED WITH THE APPROPRIATE GOVERNMENT AGENCIES.

4. SPACING OF PIPE SUPPORTS SHALL BE AS FOLLOWS:

PIPE SIZE	SUPPORT SPACING
LESS THAN 2" DIA.	12'-0" O.C. MAXIMUM
2" DIA. TO 4" DIA.	6'-0" O.C. MAXIMUM
4" DIA. TO 6" DIA.	6'-0" O.C. MAXIMUM (SUPPORTED FROM 2 JOISTS MIN.)

5. PIPING SUPPORTS SHALL NOT BE HUNG FROM PLYWOOD DECK OR METAL DECK.

POST-INSTALLED ANCHOR NOTES

1. POST-INSTALLED ANCHORS SHALL ONLY BE USED WHERE SPECIFIED ON THE CONSTRUCTION DOCUMENTS. THE CONTRACTOR SHALL OBTAIN APPROVAL FROM THE ENGINEER-OF-RECORD PRIOR TO INSTALLING POST-INSTALLED ANCHORS IN PLACE OF MISSING OR MISPLACED CAST-IN-PLACE ANCHORS. CARE SHALL BE TAKEN IN PLACING POST-INSTALLED ANCHORS TO AVOID CONFLICTS WITH EXISTING REINFORCING OR POST-TENSIONING.

2. SUBSTITUTION REQUESTS, FOR PRODUCTS OTHER THAN THOSE SPECIFIED BELOW, SHALL BE SUBMITTED BY THE CONTRACTOR TO THE ENGINEER-OF-RECORD ALONG WITH CALCULATIONS THAT ARE PREPARED & SEALED BY A REGISTERED PROFESSIONAL ENGINEER. THE CALCULATIONS SHALL DEMONSTRATE THAT THE SUBSTITUTED PRODUCT IS CAPABLE OF ACHIEVING EQUIVALENT PERFORMANCE VALUES (MINIMUM) OF THE SPECIFIED PRODUCT USING THE APPROPRIATE DESIGN PROCEDURE AND/OR STANDARD(S) AS REQUIRED BY THE BUILDING CODE.

3. POST-INSTALLED ANCHORS INCLUDE EXPANSION ANCHORS, UNDERCUT ANCHORS AND ADHESIVE ANCHORS. ADHESIVE ANCHORS SHALL CONSIST OF A STRUCTURAL ADHESIVE AND STEEL INSERT. STEEL INSERTS SHALL BE EITHER ASTM F1554, GRADE 36 THREADED ROD OR ASTM A615, GRADE 60 REINFORCING STEEL UNLESS NOTED OTHERWISE ON THE DRAWINGS. PROVIDE, STORE AND INSTALL PRODUCTS IN STRICT CONFORMANCE WITH THE MANUFACTURER'S RECOMMENDATIONS.

4. EXPANSION ANCHORS FOR USE IN CRACKED AND UNCRACKED CONCRETE SHALL HAVE BEEN TESTED AND QUALIFIED FOR USE IN ACCORDACE WITH ACI 355.2 AND ICC-ES AC193. EXPANSION ANCHORS SHALL BE EITHER HILTI KWIK BOLT TZ ANCHORS OR SIMPSON STRONG-TIE STRONG-BOLT 2 ANCHORS, UNLESS NOTED OTHERWISE ON DRAWINGS. EXPANSION ANCHORS SHALL BE 3/4" DIAMETER WITH 4 3/4" EMBEDMENT UNLESS NOTED OTHERWISE ON THE DRAWINGS.

5. EXPANSION ANCHORS FOR USE IN SOLID-GROUTED CONCRETE MASONRY SHALL HAVE BEEN TESTED AND QUALIFIED FOR USE IN ACCORDANCE WITH ICC-ES AC01. EXPANSION ANCHORS IN CMU SHALL BE EITHER HILTI KWIK BOLT 3 ANCHORS OR SIMPSON STRONG-TIE WEDGE-ALL ANCHORS.

6. UNDERCUT ANCHORS FOR USE IN CRACKED AND UNCRACKED CONCRETE SHALL HAVE BEEN TESTED AND QUALIFIED FOR USE IN ACCORDACE WITH ACI 355.2 AND ICC-ES AC193. UNDERCUT ANCHORS SHALL BE EITHER HILTI HDA ANCHORS OR SIMPSON STRONG-TIE TORQ-CUT ANCHORS, UNLESS NOTED OTHERWISE ON DRAWINGS.

7. STRUCTURAL ADHESIVES FOR USE IN CRACKED AND UNCRACKED CONCRETE SHALL HAVE BEEN TESTED AND QUALIFIED FOR USE IN ACCORDANCE WITH ACI 355.4 AND ICC-ES AC308. STRUCTURAL ADHESIVES SHALL BE HITI HIT-RE 500-SD EPOXY, HILTI HIT-HY 200-A ADHESIVE, SIMPSON STRONG-TIE SET-XP ADHESIVE OR SIMPSON STRONG-TIE AT-XP ADHESIVE UNLESS NOTED OTHERWISE ON THE DRAWINGS. REFER TO DRAWINGS FOR SIZE AND EMBEDMENT REQUIREMENTS. ALL THREADED RODS USED IN EXTERIOR EXPOSURES SHALL BE GALVANIZED.

8. THE FOLLOWING PARAMETERS HAVE BEEN USED IN THE DESIGN OF ALL ADHESIVE ANCHORS UNLESS NOTED OTHERWISE ON THE DRAWINGS:

   A. MINIMUM AGE OF CONCRETE – 28 DAYS
   B. CONCRETE TEMPERATURE RANGE FOR ANCHORS NOT EXPOSED TO THE ENVIRONMENT – MAXIMUM SHORT TERM TEMPERATURE OF 104°F; MAXIMUM LONG TERM TEMPERATURE OF 75°F.
   C. CONCRETE TEMPERATURE RANGE FOR ANCHORS EXPOSED TO THE ENVIRONMENT – MAXIMUM SHORT TERM TEMPERATURE OF 150°F; MAXIMUM LONG TERM TEMPERATURE OF 110°F.
   D. MOISTURE CONDITION OF CONCRETE AT THE TIME OF INSTALLATION – DRY CONCRETE
   E. HOLE DRILLING AND PREPARATION – PER THE MANUFACTURER'S PRINTED INSTALLATION INSTRUCTIONS

9. STRUCTURAL ADHESIVES FOR USE IN SOLID-GROUTED CONCRETE MASONRY SHALL HAVE BEEN TESTED AND QUALIFIED FOR USE IN ACCORDANCE WITH ICC-ES AC58. STRUCTURAL ADHESIVES SHALL BE HILTI HIT-HY 70 ADHESIVE, SIMPSON STRONG-TIE SET ADHESIVE, OR SIMPSON STRONG-TIE AT ADHESIVE UNLESS NOTED OTHERWISE ON THE DRAWINGS. REFER TO DRAWINGS FOR SIZE AND EMBEDMENT REQUIREMENTS. ALL THREADED RODS USED IN EXTERIOR EXPOSURES SHALL BE GALVANIZED.

10. ANCHOR CAPACITY IS DEPENDANT UPON THE SPACING BETWEEN ADJACENT ANCHORS AND THE PROXIMITY OF ANCHORS TO THE EDGE OF CONCRETE. INSTALL ANCHORS IN ACCORDANCE WITH THE SPACING AND EDGE CLEARANCES INDICATED ON THE DRAWINGS.

11. PRIOR TO PLACEMENT, THE CONTRACTOR SHALL HAVE THE MANUFACTURER'S TECHNICAL REPRESENTATIVE VISIT THE SITE TO INSTRUCT THE CONSTRUCTION TEAM AND TESTING LAB ON PROPER STORAGE AND INSTALLATION TECHNIQUES. THE CONTRACTOR SHALL PROVIDE A LETTER FROM THE MANUFACTURER'S REPRESENTATIVE STATING THAT SUCH A VISIT WAS CONDUCTED.

12. ALL EXPANSION ANCHORS SHALL BE INSPECTED BY AN INDEPENDENT TESTING LAB FOR THE FOLLOWING:

   A. CORRECT LOCATION AND POSITION OF HOLE.
   B. CORRECT HOLE DIAMETER
   C. CORRECT EMBEDMENT DEPTH.
   D. CORRECT BOLT TYPE AND FINISH.
   E. CONDITION OF HOLE IN CONNECTION MATERIAL (NO BURNING OF HOLES ALLOWED).
   F. SNUG TIGHT FIT.

13. ADHESIVE ANCHORS SHALL BE INSPECTED AND TESTED BY AN INDEPENDENT TESTING LAB AS FOLLOWS:

   ALL ANCHORS SHALL BE INSPECTED FOR THE FOLLOWING:

   A. CORRECT LOCATION AND POSITION OF HOLE.
   B. CORRECT THREADED ROD OR REINFORCING BAR SIZE.
   C. CORRECT THREADED ROD OR REINFORCING BAR TYPE AND FINISH.
   D. CONDITION OF HOLE IN CONNECTION MATERIAL (NO BURNING OF HOLES ALLOWED).
   E. SNUG TIGHT FIT.
   F. CORRECT EMBEDMENT DEPTH.
   G. HOLE PREPARATION (INCLUDING DRILL BIT TYPE WHERE CRITICAL TO MANUFACTURER) AND CLEANOUT PER MANUFACTURER'S RECOMMENDATIONS.
   H. ADHESIVE TYPE, EXPIRATION DATE AND METHOD OF STORAGE.
   I. ADHESIVE AND ANCHOR INSTALLATION PER MANUFACTURER'S RECOMMENDATIONS.

14. THE TESTING LAB SHALL PREPARE AN INSPECTION REPORT SPECIFICALLY INDICATING DEGREE OF CONFORMANCE IN ALL CATEGORIES LISTED ABOVE.

KSA
1111 Hawn Avenue
Shreveport, LA 71107
T.318.221.7501 F.318.221.7635
www.ksaeng.com
TBPE Firm Registration No. F-1356
03/27/2024

RLG CONSULTING ENGINEERS
PROJECT #2115.165
12001 N. CENTRAL EXPRESSWAY, SUITE 300
DALLAS, TEXAS 75243 214-739-8100
www.rlginc.com FIRM REG: F-493

COPYRIGHT
ALL REPORTS, PLANS, SPECIFICATIONS, COMPUTER FILES, FIELD DATA, NOTES AND OTHER DOCUMENTS AND INSTRUMENTS PREPARED BY KSA. ALL DOCUMENTS AND INSTRUMENTS OF SERVICE SHALL REMAIN THE PROPERTY OF KSA. KSA SHALL RETAIN ALL COMMON LAW, STATUTORY AND OTHER PRESERVED RIGHTS, INCLUDING THE COPYRIGHT THERETO. COPYING OR REPRODUCTION OF INSTRUMENTS OF SERVICE WITHOUT THE EXPRESS CONSENT OF KSA IS STRICTLY PROHIBITED.

City of Port Arthur Texas

TBPE FIRM #22626

NO.	DATE	REVISION

GENERAL NOTES:

STATE OF TEXAS
JOHN BRENT JACKSON
94498
LICENSED
PROFESSIONAL ENGINEER
3/27/2024

DATE: 03/29/2024

PROJECT TITLE:

PORT ARTHUR TRANSIT PARKING LOT

DRAWING TITLE:

GENERAL NOTES

DRAWING NUMBER: S1.03

SHEET NUMBER: 39

SHEET TOTAL: 59

SCALE: 12" = 1'-0"

DRAWN BY: JCG

CHECKED BY: JBJ

C:\Users\bjackson\OneDrive - RLG, Inc\Documents\2115.165_Struct_R23_bjackson.rvt

REQUIRED VERIFICATION AND INSPECTION OF SOILS

1. VERIFICATION OF SOILS AND SPECIAL INSPECTIONS FOR SUBGRADE SHALL BE AS REQUIRED IN THE FOLLOWING TABLE.
2. THE GEOTECHNICAL ENGINEERING REPORT, AND THE CONSTRUCTION DOCUMENTS SHALL BE USED TO DETERMINE COMPLIANCE.
3. REFER TO PROJECT SPECIFICATIONS FOR QUANTITY AND FREQUENCY OF INSPECTIONS AND TESTS.

VERIFICATION AND INSPECTION	CONTINUOUS	PERIODIC	NOT APPLICABLE	REFERENCED STANDARD	IBC REFERENCE	PROJECT SPECIFICATION SECTION
1. VERIFY MATERIALS BELOW SHALLOW FOUNDATIONS ARE ADEQUATE TO ACHIEVE THE DESIGN BEARING CAPACITY.		X		GEOTECHNICAL ENGINEERING REPORT	1705.6	312303, 3.14
2. VERIFY EXCAVATIONS ARE EXTENDED TO PROPER DEPTH AND HAVE REACHED PROPER MATERIAL.		X				
3. PERFORM CLASSIFICATION AND TESTING OF COMPACTED FILL MATERIALS.		X				
4. VERIFY USE OF PROPER MATERIALS, DENSITIES AND LIFT THICKNESSES DURING PLACEMENT AND COMPACTION OF COMPACTED FILL.	X					
5. PRIOR TO PLACEMENT OF COMPACTED FILL, OBSERVE SUBGRADE AND VERIFY THAT SITE HAS BEEN PREPARED PROPERLY.		X				

REQUIRED VERIFICATION AND INSPECTION OF PERIMETER GRADE BEAM BACKFILL

1. VERIFICATION OF SOILS AND SPECIAL INSPECTIONS FOR THE PERIMETER GRADE BEAM BACKFILL SHALL BE AS REQUIRED IN THE FOLLOWING TABLE.
2. THE GEOTECHNICAL ENGINEERING REPORT, AND THE APPROVED CONSTRUCTION DOCUMENTS PREPARED BY THE REGISTERED DESIGN PROFESSIONALS, SHALL BE USED TO DETERMINE COMPLIANCE.
3. REFER TO PROJECT SPECIFICATIONS FOR QUANTITY AND FREQUENCY OF INSPECTIONS AND TESTS.

VERIFICATION AND INSPECTION	CONTINUOUS	PERIODIC	NOT APPLICABLE	REFERENCED STANDARD	IBC REFERENCE	PROJECT SPECIFICATION SECTION
1. DURING FILL PLACEMENT: DURING PLACEMENT AND COMPACTION OF THE FILL MATERIAL, THE SPECIAL INSPECTOR SHALL DETERMINE THAT THE MATERIAL BEING USED, THE MAXIMUM LIFT THICKNESS, AND THE OVERALL DEPTH OF FILL COMPLY WITH THE APPROVED GEOTECHNICAL REPORT.		X		GEOTECHNICAL ENGINEERING REPORT	1705.6	312303, 3.14
a. WHERE UTILITY TRENCHES INTERSECT THE PERIMETER WALL, THE SPECIAL INSPECTOR SHALL DETERMINE THAT MATERIALS AND TECHNIQUES USED TO PROVIDE A POSITVE CUT-OFF TO PREVENT WATER MIGRATION ARE IN COMPLIANCE WITH THE CONSTRUCTION DOCUMENTS.		X				
b. AT BUILDING ENTRANCES, THE SPECIAL INSPECTOR SHALL DETERMINE THAT MATERIALS USED ARE IN COMPLIANCE WITH THE CONSTRUCTION DOCUMENTS AND THAT THEY ARE EXTENDED FROM THE FACE OF BUILDING AS INDICATED IN THE CONSTRUCTION DOCUMENTS.		X				
2. EVALUATION OF IN-PLACE DENSITY: THE SPECIAL INSPECTOR SHALL DETERMINE, AT THE APPROVED FREQUENCY, THAT THE MOISTURE CONTENT OF THE SOIL AND THE IN-PLACE DRY DENSITY OF THE COMPACTED FILL COMPLIES WITH THE APPROVED REPORT.		X				

REQUIRED VERIFICATION AND INSPECTION OF OPEN-WEB STEEL JOISTS AND JOIST GIRDERS

1. SPECIAL INSPECTIONS OF OPEN-WEB STEEL JOISTS AND GIRDERS IN BUILDINGS, STRUCTURES AND PORTIONSTHEREOF SHALL BE IN ACCORDANCE WITH THE FOLLOWING TABLE COMPLIANCE.

VERIFICATION AND INSPECTION	CONTINUOUS	PERIODIC	NOT APPLICABLE	REFERENCED STANDARD	IBC REFERENCE	PROJECT SPECIFICATION SECTION
1. INSTALLATION OF OPEN-WEB STEEL JOISTS AND JOIST GIRDERS.					1705.2.3	052100, PART 3, FIELD QUALITY CONTROL
a. END CONNECTIONS - WELDING OR BOLTED.		X		SJI SPECIFICATIONS LISTED IN SECTION 2207.1.		
b. BRIDGING - HORIZONTAL OR DIAGONAL						
1. STANDARD BRIDGING.		X		SJI SPECIFICATIONS LISTED IN SECTION 2207.1.		
2. BRIDGING THAT DIFFERS FROM SJI SPECIFICATIONS LISTED IN SECTION 2207.1.		X				

PERMIT'S APPLICATION RESPONSIBILITIES

1. THE PERMIT APPLICANT SHALL SUBMIT THIS SHEET AS THE STATEMENT OF SPECIAL INSPECTIONS PREPARED BY THE REGISTERED DESIGN PROFESSIONAL IN RESPONSIBLE CHARGE AS A CONDITION FOR PERMIT ISSUANCE.
2. THE PERMIT APPLICANT SHALL LIST BELOW THE INDIVIDUALS, APPROVED AGENCIES OR FIRMS INTENDED TO BE RETAINED FOR CONDUCTING SUCH INSPECTIONS.

a. SUBGRADE PREPARATION, DRAINAGE COURSES, WALL AND GRADE BEAM BACKFILL, DRILLED PIERS, PILES, FOOTINGS AND OTHER GEOTECHNICAL RELATED ELEMENTS.

Name or Firm Name

b. CONCRETE

Name or Firm Name

c. STRUCTURAL STEEL, STEEL JOISTS AND JOIST GIRDERS,METAL DECK AND SPRAYED ON FIREPROOFING

Name or Firm Name

d. CMU

Name or Firm Name

e. LIGHT GAUGE METAL FRAMING

Name or Firm Name

f. WOOD

Name or Firm Name

3. THE PERMIT APPLICANT SHALL OBTAIN ALL NECESSARY SIGNATURES INCLUDING CONTRACTOR ACKNOWLEDGEMENT OF SPECIAL INSPECTION REQUIREMENTS.

CONTRACTOR'S ACKNOWLEDGEMENT OF RESPONSIBILITY FOR IMPLEMENTATION OF THE SPECIAL INSPECTIONS PLAN

1. AS PART OF THE SUBMITTAL FOR BUILDING PERMIT, THE GENERAL CONTRACTOR SHALL COMPLETE THE FOLLOWING FORM AS A WRITTEN STATEMENT OF RESPONSIBILITY.

a. AS THE GENERAL CONTACTOR, WE ARE AWARE OF THE REQUIREMENTS FOR SPECIAL INSPECTIONS AS LISTED IN THE STATEMENT OF SPECIAL INSPECTIONS.

b. AS GENERAL CONTRACTOR, WE ACKNOWLEDGE THAT CONTROL MUST BE EXERCISED BY OUR ORGAINIZATION TO OBTAIN CONFORMANCE WITH THE CONSTRUCTION DOCUMENTS APPROVED BY THE BUILDING OFFICIAL. WE ACKNOWLEDGE OUR RESPONSIBILITY TO DISTRIBUTE UP TO DATE DOCUMENTS, INCLUDING PLANS, SPECIFICATIONS, ADDENDA, CHANGE ORDERS, RESPONSES TO REQUESTS FOR INFORMATION, ARCHITECTURAL SUPPLEMENTAL INSTRUCTIONS, SHOP DRAWINGS, ETC., TO ALL SUBCONTRACTORS AND TO THE SPECIAL INSPECTORS. WE ACKNOWLEDGE OUR RESPONSIBILITY FOR CALLING THE APPROPRIATE SPECIAL INSPECTORS AT APPROPRIATE TIMES TO FULLFILL THE REQUIREMENTS IN THE STATEMENT OF SPECIAL INSPECTIONS.

c. AS GENERAL CONTRACTOR, WE HAVE DEVELOPED PLANS AND PROCEDURES FOR EXERCISING CONTROL WITHIN OUR ORGANIZATION, FOR THE METHOD AND FREQUENCY OF REPORTING AND FOR THE DISTRIBUTION OF THE REPORTS.

d. THE FOLLOWING QUALIFIED INDIVIDUAL(S) WITHIN OUR FIRM WILL BE RESPONSIBLE FOR CONTROLLING THE PLAN, PROCEDURES AND PROCESS OF THE SPECIAL INSPECTIONS PLAN:

Name — Position within Firm

Name — Position within Firm

Name — Position within Firm

Name — Position within Firm

2. THE GENERAL CONTRACTOR ACKNOWLEDGES OUR RESPONSIBLITIES AS STATED ABOVE.

Name — Position within Firm — Date

Firm Name

INSPECTION OF FABRICATORS

1. WHERE FABRICATION OF STRUCTURAL, LOAD-BEARING OR LATERAL LOAD-RESISTING MEMBERS OR ASSEMBLIES IS BEING CONDUCTED ON THE PREMISES OF A FABRICATOR'S SHOP, SPECIAL INSPECTIONS OF THE FABRICATED ITEMS SHALL BE PERFORMED DURING FABRICATION.
2. SPECIAL INSPECTIONS DURING FABRICATION ARE NOT REQUIRED WHERE THE FABRICATOR MAINTAINS APPROVED DETAILED FABRICATION AND QUALITY CONTROL PROCEDURES THAT PROVIDE A BASIS FOR CONTROL OF THE WORKMANSHIP AND THE FABRICATOR'S ABILITY TO CONFORM TO APPROVED CONSTRUCTION DOCUMENTS AND THIS CODE. APPROVAL SHALL BE BASED UPON REVIEW OF FABRICATION AND QUALITY CONTROL PROCEDURES AND PERIODIC INSPECTION OF FABRICATION PRACTICES BY THE BUILDING OFFICIAL.
3. SPECIAL INSPECTIONS DURING FABRICATION ARE NOT REQUIRED WHERE THE WORK IS DONE ON THE PREMISES OF A FABRICATOR REGISTERED AND APPROVED TO PERFORM SUCH WORK WITHOUT SPECIAL INSPECTION. APPROVAL SHALL BE BASED UPON REVIEW OF THE FABRICATOR'S WRITTEN PROCEDURAL AND QUALITY CONTROL MANUALS AND PERIODIC AUDITING OF FABRICATION PRACTICES BY AN APPROVED AGENCY AT COMPLETION OF FABRICATION, THE APPROVED FABRICATOR SHALL SUBMIT A CERTIFICATE OF COMPLIANCE TO THE OWNER OR THE OWNER'S AUTHORIZED AGENT FOR SUBMITTAL TO THE BUILDING OFFICIAL AS SPECIFIED IN SECTION 1704.5 STATING THAT THE WORK WAS PERFORMED IN ACCORDANCE WITH THE APPROVED CONSTRUCTION DOCUMENTS

STATEMENT OF SPECIAL INSPECTIONS

1. INFORMATION ON THIS SHEET IS BEING SUBMITTED IN ACCORDANCE WITH THE SPECIAL INSPECTIONS PROVISIONS OF THE 2015 INTERNATIONAL BUILDING CODE. THIS INFORMATION CONSTITUTES THE SCHEDULE OF SPECIAL INSPECTIONS (SSI) REQUIRED FOR THIS PROJECT.
2. THE OWNER OR THE OWNER'S AUTHORIZED AGENT, OTHER THAN THE CONTRACTOR, SHALL EMPLOY ONE OR MORE APPROVED AGENCIES TO PROVIDE SPECIAL INSPECTIONS AND TESTS DURING CONSTRUCTION ON THE TYPES OF WORK LISTED HEREIN.
3. THE SPECIAL INSPECTOR SHALL BE A QUALIFIED PERSON WHO SHALL DEMONSTRATE COMPETENCE, TO THE SATISFACTION OF THE BUILDING OFFICIAL, FOR INSPECTION OF THE PARTICULAR TYPE OF CONSTRUCTION OR OPERATION REQUIRING SPECIAL INSPECTION.
4. THE SPECIAL INSPECTOR SHALL FULFILL THE FOLLOWING REPORT REQUIREMENTS:

a. SPECIAL INSPECTORS SHALL KEEP RECORDS OF INSPECTIONS.

b. THE SPECIAL INSPECTOR SHALL FURNISH INSPECTION REPORTS TO THE BUILDING OFFICIAL, THE OWNER, THE GENERAL CONTRACTOR, THE STRUCTURAL ENGINEER, AND THE ARCHITECT. IN ADDITION, REPORTS RELATED TO GEOTECHNICAL ISSUES SHALL BE DISTRIBUTED TO THE

GEOTECHNICAL ENGINEER. WHEN TESTS OR INSPECTIONS INDICATE THAT THE WORK DOES NOT COMPLY WITH THE CONSTRUCTION DOCUMENTS, THE SPECIAL INSPECTOR SHALL NOTIFY THE OWNER, CONTRACTOR, ARCHITECT AND STRUCTURAL ENGINEER BY PHONE ON THE DAY OF THE TEST OR INSPECTION AND SHALL FOLLOW THAT CALL WITH AN EXPEDITED WRITTEN REPORT WITHIN ONE BUSINESS DAY. ALL OTHER REPORTS SHALL BE SUBMITTED WITHIN 5 BUSINESS DAYS OF THE EVENT DOCUMENTED.

c. REPORTS SHALL INDICATE THAT WORK INSPECTED WAS OR WAS NOT COMPLETED IN

CONFORMANCE TO APPROVED CONSTRUCTION DOCUMENTS

d. DISCREPANCIES SHALL BE BROUGHT TO THE IMMEDIATE ATTENTION OF THE CONTRACTOR FOR CORRECTION.

e. IF THE DISCREPANCIES ARE NOT CORRECTED, THE DISCREPANCIES SHALL BE BROUGHT TO THE ATTENTION OF THE BUILDING OFFICIAL AND TO THE REGISTERED DESIGN PROFESSIONAL IN

RESPONSIBLE CHARGE WITHIN ONE BUSINESS DAY. A FINAL REPORT DOCUMENTING REQUIRED SPECIAL INSPECTIONS AND CORRECTION OF ANY DISCREPANCIES NOTED IN THE INSPECTIONS SHALL BE SUBMITTED BY THE SPECIAL INSPECTOR AT A POINT IN TIME AGREED UPON BY THE PERMIT APPLICANT AND THE BUILDING OFFICIAL PRIOR TO THE START OF WORK.

g. THE SPECIAL INSPECTOR'S FINAL REPORT SHALL IDENTIFY THE FOLLOWING:

1) THE MATERIALS, SYSTEMS, COMPONENTS, AND WORK REQUIRED TO HAVE SPECIAL INSPECTION OR TESTING BY THE BUILDING OFFICIAL OR BY THE REGISTERED DESIGN PROFESSIONAL RESPONSIBLE FOR EACH PORTION OF THE WORK.

2) THE TYPE AND EXTENT OF EACH SPECIAL INSPECTION.

3) THE TYPE AND EXTENT OF EACH TEST.

4) ADDITIONAL REQUIREMENTS FOR SPECIAL INSPECTION OR TESTING FOR SEISMIC OR WIND RESISTANCE AS SPECIFIED IN SECTIONS 1705.11, 1705.12 AND 1705.13.

i. WHERE SECTION 1705.12 OR 1705.13 SPECIFIES SPECIAL INSPECTION, TESTING OR QUALIFICATION FOR SEISMIC RESISTANCE, THE STATEMENT OF SPECIAL INSPECTIONS SHALL IDENTIFY THE DESIGNATED SEISMIC SYSTEMS AND SEISMIC FORCE-RESISTING SYSTEMS THAT ARE SUBJECT TO SPECIAL INSPECTIONS OR TESTS.

ii. WHERE SECTION 1705.11 SPECIFIES SPECIAL INSPECTION FOR WIND REQUIREMENTS, THE STATEMENT OF SPECIAL INSPECTIONS SHALL IDENTIFY THE MAIN WINDFORCE-RESISTING SYSTEMS AND WIND-RESISTING COMPONENTS SUBJECT TO SPECIAL INSPECTIONS. THE REPORT SHALL BE SIGNED BY THE SPECIAL INSPECTOR

5. FOR EACH TYPE OF SPECIAL INSPECTION, IDENTIFICATION AS TO WHETHER IT WILL BE CONTINUOUS SPECIAL INSPECTION, PERIODIC SPECIAL INSPECTION OR PERFORMED IN ACCORDANCE WITH THE NOTATION USED IN THE REFERENCED STANDARD WHERE THE INSPECTIONS ARE DEFINED.
6. REFER TO PROJECT SPECIFICATIONS FOR ADDITIONAL INFORMATION ON QUANTITY, FREQUENCY AND DETAILED INFORMATION ON TESTING, INSPECTION AND REPORTING.
7. PRIOR TO THE START OF CONSTRUCTION, THE CONTRACTOR SHALL CONDUCT A PRE-CONSTRUCTION MEETING TO DISCUSS THE SPECIAL INSPECTION REQUIREMENTS WITH ALL INVOLVED PARTIES.
8. THE SPECIAL INSPECTIONS PROGRAM OUTLINED HEREIN, DOES NOT RELIEVE THE CONTRACTOR OR ANY OTHER ENTITY OF ANY CONTRACTUAL DUTIES, INCLUDING QUALITY CONTROL, QUALITY ASSURANCE, OR SAFETY. THE CONTRACTOR IS SOLELY RESPONSIBLE FOR CONSTRUCTION MEANS, METHODS, AND JOB SITE SAFETY.
9. THE CONTRACTOR SHALL PAY FOR ENGINEERING SERVICES REQUIRED TO INVESTIGATE AND CORRECT WORK THAT DOES NOT CONFORM TO THE PROJECT DOCUMENTS OR IS FOUND DEFICIENT OR DEFECTIVE.

KSA
1111 Hawn Avenue
Shreveport, LA 71107
T.318.221.7501 F.318.221.7635
www.ksaeng.com
TBPE Firm Registration No. F-1356
03/27/2024

RLG CONSULTING ENGINEERS
PROJECT #2115.165
12001 N. CENTRAL EXPRESSWAY, SUITE 300
DALLAS, TEXAS 75243 214-739-8100
www.rlginc.com FIRM REG: F-493

COPYRIGHT
ALL REPORTS, PLANS, SPECIFICATIONS, COMPUTER FILES, FIELD DATA, NOTES AND OTHER DOCUMENTS AND ANY INSTRUMENTS PREPARED BY KSA, AS INSTRUMENTS OF SERVICE SHALL REMAIN THE PROPERTY OF KSA. KSA SHALL RETAIN ALL COMMON LAW, STATUTORY AND OTHER PRESERVED RIGHTS, INCLUDING THE COPYRIGHT THERETO. COPYING OR REPRODUCTION OF INSTRUMENTS OF SERVICE WITHOUT THE EXPRESS CONSENT OF KSA IS STRICTLY PROHIBITED.

City of Port Arthur Texas

TBPE FIRM #22626

NO.	DATE	REVISION

GENERAL NOTES:

STATE OF TEXAS
JOHN BRENT JACKSON
94498
LICENSED
PROFESSIONAL ENGINEER
3/28/2024

DATE: DEC 2025

PROJECT TITLE:

PORT ARTHUR TRANSIT PARKING LOT

DRAWING TITLE:

SPECIAL INSPECTIONS

DRAWING NUMBER: S1.04

SHEET NUMBER: 40 — SHEET TOTAL: 59

SCALE: 12" = 1'-0"

DRAWN BY: JCG — CHECKED BY: JBJ

C:\Users\bjackson\OneDrive - RLG Inc\Documents\2115.165_Street_

REQUIRED SPECIAL INSPECTIONS AND TESTS OF CONCRETE CONSTRUCTION

1. SPECIAL INSPECTIONS AND VERIFICATIONS FOR CONCRETE CONSTRUCTION SHALL BE AS REQUIRED IN THE FOLLOWING TABLE.

VERIFICATION AND INSPECTION	CONTINUOUS	PERIODIC	NOT APPLICABLE	REFERENCED STANDARD	IBC REFERENCE	PROJECT SPECIFICATION SECTION
1. INSPECT REINFORCEMENT, INCLUDING PRESTRESSING TENDONS, AND VERIFY PLACEMENT.		X		ACI 318 CH.20, 25.2, 25.3, 26.5.1-26.5.3	1908.4	032000, 3.02
2. REINFORCING BAR WELDING:						
a. VERIFY WELDABILITY OF REINFORCING BARS OTHER THAN ASTM A706		X				
b. INSPECT SINGLE-PASS FILLET WELDS, MAXIMUM 5/16"; AND		X			-	032000, 3.02
c. INSPECT ALL OTHER WELDS		X				
3. INSPECT ANCHORS CAST IN CONCRETE		X		ACI 318: 17.8.2	-	
4. INSPECT ANCHORS POST-INSTALLED IN HARDENED CONCRETE MEMBERS						
a. ADHESIVE ANCHORS INSTALLED IN HORIZONTALLY OR UPWARDLY INCLINED ORIENTATIONS TO RESIST SUSTAINED TENSION LOADS	X			ACI 318:17.8.2.4		
b. MECHANICAL ANCHORS AND ADHESIVE ANCHORS NOT DEFINED IN 4.a		X		ACI 318: 17.8.2		
5. VERIFY USE OF REQUIRED DESIGN MIX		X		ACI 318: CH. 19, 26.4.3, 26.4.4	1904.1, 1904.2 1908.2, 1908.3	033000, 3.03
6. PRIOR TO CONCRETE PLACEMENT, FABRICATE SPECIMENS FOR STRENGTH TESTS, PERFORM SLUMP AND AIR CONTENT TESTS, AND DETERMINE THE TEMPERATURE OF THE CONCRETE	X			ASTM C172, ASTM C31, ACI 318: 26.4.5, 26.12	1908.1	033000, 3.03
7. INSPECT CONCRETE AND SHOTCRETE PLACEMENT FOR PROPER APPLICATION TECHNIQUES.	X			ACI 318: 26.4.5	1908.6, 1908.7, 1908.8	
8. VERIFY MAINTENANCE OF SPECIFIED CURING TEMPRATURE AND TECHNIQUES.	X			ACI 318: 26.4.7-26.4.9	1908.9	033000, 3.03
9. INPSECTION PRESTRESSED CONCRETE FOR:						
a. APPLICATION OF PRESTRESSING FORCES.	X			ACI 318: 26.9.2.1	-	033000, 3.03; 033816, 3.04
b. GROUTING OF BONDED PRESTRESSING TENDONS	X			ACI 318: 26.9.2.1	-	033000, 3.03; 033817, 3.4
10. INSPECT ERECTION OF PRECAST CONCRETE MEMBERS		X		ACI 318: Ch. 26.8	-	
11. VERIFICATION OF IN-SITU CONCRETE STRENGTH, PRIOR TO STRESSING OF TENDONS IN POST-TENSIONED CONCRETE AND PRIOR TO REMOVAL OF SHORES AND FORMS FROM BEAMS AND STRUCTURAL SLABS.		X		ACI 318: Ch. 26.10.2	-	033000, 3.03; 033816, 3.04
12. INSPECT FORMWORK FOR SHAPE, LOCATION AND DIMENSIONS OF THE CONCRETE MEMBER BEING		X		ACI 318:26.10.1(b)	-	031000, 3.05

STRUCTURAL STEEL INSPECTION CONTINUED

TABLE N5.6-1
INSPECTION TASKS PRIOR TO BOLTING

VERIFICATION AND INSPECTION	CONTINUOUS	PERIODIC	NOT APPLICABLE	REFERENCED STANDARD	IBC REFERENCE	PROJECT SPECIFICATION SECTION
1. MANUFACTURER'S CERTIFICATIONS AVAILABLE FOR FASTENER MATERIALS.	X					
2. FASTENERS MARKED IN ACCORDANCE WITH ASTM REQUIREMENTS.		X				
3. CORRECT FASTENERS SELECTED FOR THE JOINT DETAIL (GRADE, TYPE, BOLT LENGTH IF THREADS ARE TO BE EXCLUDED FROM SHEAR PLANE).		X				
4. CORRECT BOLTING PROCEDURE SELECTED FOR JOINT DETAIL.		X				
5. CONNECTING ELEMENTS, INCLUDING THE APPROPRIATE FAYING SURFACE CONDITION AND HOLE PREPARATION, IF SPECIFIED, MEET APPLICABLE REQUIREMENTS.		X				
6. PRE-INSTALLATION VERIFICATION TESTING BY INSTALLATION PERSONNEL OBSERVED AND DOCUMENTED FOR FASTENER ASSEMBLIES AND METHODS USED.		X				
7. PROTECTED STORAGE PROVIDED FOR BOLTS, NUTS, WASHERS AND OTHER FASTENER COMPONENTS.		X				

TABLE N5.6-2
INSPECTION TASKS DURING BOLTING

VERIFICATION AND INSPECTION	CONTINUOUS	PERIODIC	NOT APPLICABLE	REFERENCED STANDARD	IBC REFERENCE	PROJECT SPECIFICATION SECTION
1. FASTENER ASSEMBLIES PLACED IN ALL HOLES AND WASHERS AND NUTS ARE POSITIONED AS REQUIRED.		X				
2. JOINT BROUGHT TO THE SNUG-TIGHT CONDITION PRIOR TO THE PRETENSIONING OPERATION.		X				
3. FASTENER COMPONENT NOT TURNED BY THE WRENCH PREVENTED FROM ROTATING.		X				
4. FASTENERS ARE PRETENSIONED IN ACCORDANCE WITH THE RCSC SPECIFICATION, PROGRESSING SYSTEMATICALLY FROM THE MOST RIGID POINT TOWARD THE FREE EDGES.		X				

TABLE N5.6-3
INSPECTION TASKS AFTER BOLTING

VERIFICATION AND INSPECTION	CONTINUOUS	PERIODIC	NOT APPLICABLE	REFERENCED STANDARD	IBC REFERENCE	PROJECT SPECIFICATION SECTION
1. DOCUMENT ACCEPTANCE OR REJECTION OF BOLTED CONNECTIONS.	X					

REQUIRED SPECIAL INSPECTION AND TESTS OF STEEL CONSTRUCTION

1. SPECIAL INSPECTIONS FOR STEEL CONSTRUCTION SHALL BE IN ACCORDANCE WITH THE QUALITY ASSURANCE INSPECTION REQUIREMENTS OF AISC 360, AS REQUIRED IN THE FOLLOWING TABLES.

TABLE N5.4-1
INSPECTION TASKS PRIOR TO WELDING

VERIFICATION AND INSPECTION	CONTINUOUS	PERIODIC	NOT APPLICABLE	REFERENCED STANDARD	IBC REFERENCE	PROJECT SPECIFICATION SECTION
1. WELDER QUALIFICATION RECORDS AND CONTINUITY RECORDS.		X				
2. WPS AVAILABLE.	X					
3. MANUFACTURER CERTIFICATIONS FOR WELDING CONSUMABLES AVAILABLE.	X					
4. MATERIAL IDENTIFICATION (TYPE/GRADE).		X				
5. WELDER IDENTIFICATION SYSTEM.[a]		X				
6. FIT-UP OF GROOVE WELDS (INCLUDING JOINT GEOMETRY). a. JOINT PREPARATIONS. b. DIMENSIONS (ALIGNMENT, ROOT OPENING, ROOT FACE, BEVEL). c. CLEANLINESS (CONDITION OF STEEL SURFACES). d. TACKING (TACK WELD QUALITY AND LOCATION). e. BACKING TYPE AND FIT (IF APPLICABLE).		X				
7. FIT-UP OF CJP GROOVE WELDS OF HSS T-, Y- AND K-JOINTS WITHOUT BACKING (INCLUDING JOINT GEOMETERY). a. JOINT PREPARATIONS. b. DIMENSIONS (ALIGNMENT, ROOT OPENING, ROOT FACE, BEVEL). c. CLEANLINESS (CONDITION OF STEEL SURFACES). d. TACKING (TACK WELD QUALITY AND LOCATION).		X				
8. CONFIGURATION AND FINISH OF ACCESS HOLES.		X				
9. FIT-UP OF FILLET WELDS. a. DIMENSIONS (ALIGNMENT, GAPS AT ROOT). b. CLEANLINESS (CONDITION OF STEEL SURFACES). c. TACKING (TACK WELD QUALITY AND LOCATON).		X				
10. CHECK WELDING EQUIPMENT						

[a] THE FABRICATOR OR ERECTOR, AS APPLICABLE, SHALL MAINTAIN A SYSTEM BY WHICH A WELDER WHO HAS WELDED A JOINT OR MEMBER CAN BE IDENTIFIED. STAMPS, IF USED, SHALL BE THE LOW-STRESS TYPE.

TABLE N5.4-2
INSPECTION TASKS DURING WELDING

VERIFICATION AND INSPECTION	CONTINUOUS	PERIODIC	NOT APPLICABLE	REFERENCED STANDARD	IBC REFERENCE	PROJECT SPECIFICATION SECTION
1. CONTROL AND HANDLING OF WELDING CONSUMABLES. a. PACKAGING. b. EXPOSURE CONTROL.		X				
2. NO WELDING OVER CRACKED TACK WELDS.		X				
3. ENVIRONMENTAL CONDITIONS. a. WIND SPEED WITHIN LIMITS. b. PRECIPITATION AND TEMPERATURE.		X				
4. WPS FOLLOWED. a. SETTINGS ON WELDING EQUIPMENT. b. TRAVEL SPEED. c. SELECTED WELDING MATERIALS. d. SHIELDING GAS TYPE/FLOW RATE. e. PREHEAT APPLIED f. INTERPASS TEMPERATURE MAINTAINED (MIN./MAX.). g. PROPER POSITION (F, V, H, OH).		X				
5. WELDING TECHNIQUES. a. INTERPASS AND FINAL CLEANING. b. EACH PASS WITHIN PROFILE LIMITATIONS. c. EACH PASS MEETS QUALITY REQUIREMENTS.		X				
6. PLACEMENT AND INSTALLATION OF STEEL HEADED STUD ANCHORS.	X					

TABLE N5.4-3
INSPECTION TASKS AFTER WELDING

VERIFICATION AND INSPECTION	CONTINUOUS	PERIODIC	NOT APPLICABLE	REFERENCED STANDARD	IBC REFERENCE	PROJECT SPECIFICATION SECTION
1. WELDS CLEANED.		X				
2. SIZE, LENGTH AND LOCATION OF WELDS.	X					
3. WELDS MEET VISUAL ACCEPTANCE CRITERIA. a. CRACK PROHIBITION. b. WELD/BASE-METAL FUSION. c. CRATER CROSS SECTION. d. WELD PROFILES. e. WELD SIZE. f. UNDERCUT. g. POROSITY.	X					
4. ARC STRIKES.	X					
5. *k*-AREA.[a]	X					
6. WELD ACCESS HOLES IN ROLLED HEAVY SHAPES AND BUILT-UP HEAVY SHAPES. [b]	X					
7. BACKING REMOVED AND WELD TABS REMOVED (IF REQUIRED).	X					
8. REPAIR ACTIVITES.	X					
9. DOCUMENT ACCEPTANCE OR REJECTION OF WELDED JOINT OR MEMBER.	X					
10. NO PROHIBITED WELDS HAVE BEEN ADDED WITHOUT THE APPROVAL OF THE EOR.		X				

[a] WHEN WELDING OF DOUBLER PLATES, CONTINUITY PLATES OR STIFFENERS HAS BEEN PERFORMED IN THE *k*-AREA, VISUALLY INSPECT THE WEB *k*-AREA FOR CRACKS WITHIN 3 in. (75 mm) OF THE WELD.

[b] AFTER ROLLED HEAVY SHAPES (SEE SECTION A3.1c) AND BUILT-UP HEAVY SHAPES (SEE SECTION A3.1d) ARE WELDED, VISUALLY INSPECT THE WELD ACCESS HOLE FOR CRACKS.

REQUIRED VERIFICATION AND INSPECTION OF METAL DECK CONSTRUCTION

1. SPECIAL INSPECTIONS OF METAL DECKING IN BUILDINGS, STRUCTURES AND PORTIONS THEREOF SHALL BE IN ACCORDANCE WITH THE FOLLOWING TABLE

VERIFICATION AND INSPECTION	CONTINUOUS	PERIODIC	NOT APPLICABLE	REFERENCED STANDARD	IBC REFERENCE	PROJECT SPECIFICATION SECTION
1. INSPECTION OR EXECUTION TASKS PRIOR TO DECK PLACEMENT						
a. VERIFY COMPLIANCE OF MATERIALS (DECK AND ALL DECK ACCESSORIES) WITH CONSTRUCTION DOCUMENTS, INCLUDING PROFILES, MATERIAL PROPERTIES, AND BASE METAL THICKNESS		X				
b. DOCUMENT ACCEPTANCE OR REJECTION OF DECK AND DECK ACCESSORIES		X				
2. INSPECTION OR EXECUTION TASKS AFTER TO DECK PLACEMENT						
a. VERIFY COMPLIANCE OF DECK AND ALL DECK ACCESSORIES INSTALLATION WITH CONSTRUCTION DOCUMENTS		X				
b. DOCUMENT ACCEPTANCE OR REJECTION OF DECK AND DECK ACCESSORIES		X				
c. DOCUMENT ACCEPTANCE OR REJECTION OF INSTALLATION OF DECK AND DECK ACCESSORIES		X				
3. INSPECTION OR EXECUTION TASKS PRIOR TO WELDING						
a. WELDING PROCEDURE SPECIFICATIONS (WPS) AVAILABLE		X				
b. MANUFACTURER CERTIFICATIONS FOR WELDING CONSUMABLES AVAILABLE		X		MANUFACTURER'S APPROVED SHOP DRAWINGS	IBC 1705.2.2 SDI QA/QC	053000, 3.04
c. MATERIAL IDENTIFICATION (TYPE/GRADE)		X				
d. CHECK WELDING EQUIPMENT		X				
4. INSPECTION OR EXECUTION TASKS DURING WELDING						
a. USE OF QUALIFIED WELDERS		X				
b. CONTROL AND HANDLING OF WELDING CONSUMABLES		X				
c. ENVIRONMENTAL CONDITIONS (WIND SPEED, MOISTURE, TEMPRATURE)		X				
d. WPS FOLLOWED		X				
5. INSPECTION OR EXECUTION TASKS AFTER WELDING						
a. VERIFY SIZE AND LOCATION OF WELDS, INCLUDING SUPPORT, SIDELAP, AND PERIMETER WELDS.		X				
b. WELDS MEET VISUAL ACCEPTANCE CRITERIA		X				
c. VERIFY REPAIR ACTIVITIES		X				
d. DOCUMENT ACCEPTANCE OR REJECTION OF WELDS		X				
6. INSPECTION OR EXECUTION TASKS PRIOR TO MECHANICAL FASTENING						
a. MANUFACTURER INSTALLATION INSTRUCTIONS AVAILABLE FOR MECHANICAL FASTENERS		X				
b. PROPER TOOLS AVAILABLE FOR FASTENER INSTALLATION		X				
c. PROPER STORAGE FOR MECHANICAL FASTENERS		X				
7. INSPECTION OR EXECUTION TASKS DURING MECHANICAL FASTENING						
a. FASTENERS ARE POSITIONED AS REQUIRED		X				
b. FASTENERS ARE INSTALLED IN ACCORDANCE WITH MANUFACTURER'S INSTRUCTION		X				
8. INSPECTION OR EXECUTION TASKS AFTER MECHANICAL FASTENING						
a. CHECK SPACING, TYPE, AND INSTALLATION OF SUPPORT FASTENERS		X				
b. CHECK SPACING, TYPE, AND INSTALLATION OF SIDELAP FASTENERS		X				
c. CHECK SPACING, TYPE, AND INSTALLATION OF PERIMETER FASTENERS		X				
d. VERIFY REPAIR ACTIVITIES		X				
e. DOCUMENT ACCEPTANCE OR REJECTION OF MECHANICAL FASTENERS		X				

City of Port Arthur Texas

TBPE FIRM #22626

NO.	DATE	REVISION

GENERAL NOTES:

KSA
1111 Hawn Avenue
Shreveport, LA 71107
T.318.221.7501 F.318.221.7635
www.ksaeng.com
TBPE Firm Registration No. F-1356
03/27/2024

RLG CONSULTING ENGINEERS
PROJECT #2115.165
12001 N. CENTRAL EXPRESSWAY, SUITE 300
DALLAS, TEXAS 75243 214-739-8100
www.rlginc.com FIRM REG: F-493

COPYRIGHT
ALL REPORTS, PLANS, SPECIFICATIONS, COMPUTER FILES, FIELD DATA, NOTES AND OTHER DOCUMENTS AND ANY INSTRUMENTS PREPARED BY KSA. AS INSTRUMENTS OF SERVICE SHALL REMAIN THE PROPERTY OF KSA. KSA SHALL RETAIN ALL COMMON LAW, STATUTORY AND OTHER PRESERVED RIGHTS, INCLUDING THE COPYRIGHT THERETO. COPYING OR REPRODUCTION OF INSTRUMENTS OF SERVICE WITHOUT THE EXPRESS CONSENT OF KSA IS STRICTLY PROHIBITED.

DATE: DEC 2025

PROJECT TITLE: PORT ARTHUR TRANSIT PARKING LOT

DRAWING TITLE: SPECIAL INSPECTIONS

DRAWING NUMBER: S1.05

SHEET NUMBER: 41 SHEET TOTAL: 59

SCALE: 12" = 1'-0"

DRAWN BY: JCG CHECKED BY: JBJ

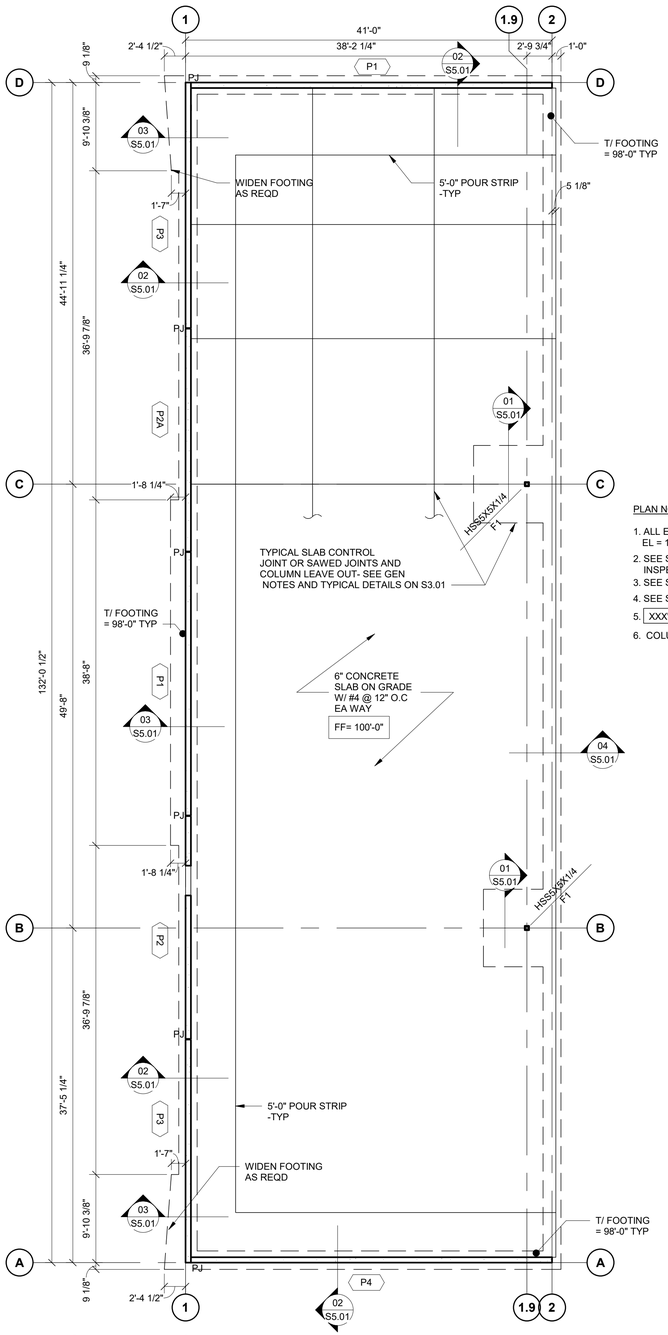

01 FOUNDATION PLAN
1/8" = 1'-0"

PLAN NOTES:

1. ALL ELEVATIONS ARE REFERENCED TO LEVEL 1 FINISHED FLOOR EL = 100'-0" (xxx.xx'). REFERENCE SITE PLAN FOR ABSOLUTE ELEVATIONS.
2. SEE S1 SERIES FOR ABBREVIATIONS, GENERAL NOTES, AND SPECIAL INSPECTIONS.
3. SEE SHEET S3.01 FOR TYPICAL SPREAD FOOTING DETAIL.
4. SEE S3 SERIES SHEETS FOR TYPICAL DETAILS.
5. XXX'-X" - DENOTES TOP OF SLAB ELEVATION.
6. COLUMN CALL OUT:

COLUMN SIZE
FOOTING SIZE
SEE SCHED ON S3.01

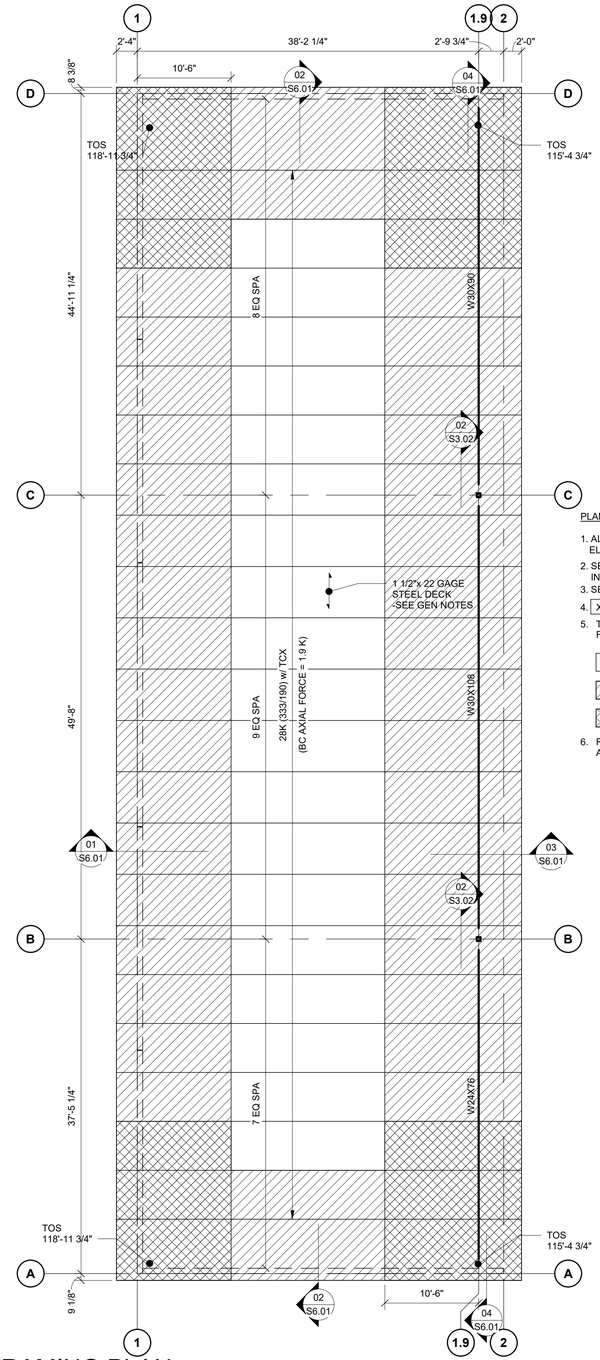

02 ROOF FRAMING PLAN
1/8" = 1'-0"

PLAN NOTES:

1. ALL ELEVATIONS ARE REFERENCED TO LEVEL 1 FINISHED FLOOR EL = 100'-0" (xxx.xx'). REFERENCE SITE PLAN FOR ABSOLUTE ELEVATIONS.
2. SEE S1 SERIES FOR ABBREVIATIONS, GENERAL NOTES, AND SPECIAL INSPECTIONS.
3. SEE S3 SERIES SHEETS FOR TYPICAL DETAILS.
4. XXX'-X" - DENOTES TOP OF STEEL ELEVATION (METAL DECK BEARING).
5. THE JOIST MANUFACTURER SHALL DESIGN ROOF JOISTS AND DECK CONNECTIONS FOR NET WIND UPLIFT FORCES AS INDICATED BY ROOF ZONES ON PLAN.

INTERIOR ZONE - SEE GENERAL NOTES.

PERIMETER ZONE - SEE GENERAL NOTES.

CORNER ZONE - SEE GENERAL NOTES.

6. ROOF IS DESIGNED FOR A FUTURE PHOTOVOLTAIC SOLAR PANEL SYSTEM. ADDL DEAD LOAD INCLUDED = 5 PSF (TOTAL DEAD LOAD = 25 PSF)

KSA
1111 Hawn Avenue
Shreveport, LA 71107
T.318.221.7501 F.318.221.7635
www.ksaeng.com
TBPE Firm Registration No. F-1356
03/27/2024

RLG CONSULTING ENGINEERS
PROJECT #2115.165
12001 N. CENTRAL EXPRESSWAY, SUITE 300
DALLAS, TEXAS 75243 214-739-8100
www.rlginc.com FIRM REG: F-493

COPYRIGHT
ALL REPORTS, PLANS, SPECIFICATIONS, COMPUTER FILES, FIELD DATA, NOTES AND OTHER DOCUMENTS AND ANY INSTRUMENTS PREPARED BY KSA, AS INSTRUMENTS OF SERVICE SHALL REMAIN THE PROPERTY OF KSA. KSA SHALL RETAIN ALL COMMON LAW, STATUTORY AND OTHER PRESERVED RIGHTS, INCLUDING THE COPYRIGHT THERETO. COPYING OR REPRODUCTION OF INSTRUMENTS OF SERVICE WITHOUT THE EXPRESS CONSENT OF KSA IS STRICTLY PROHIBITED.

City of Port Arthur Texas

TBPE FIRM #22626

NO.	DATE	REVISION

GENERAL NOTES:

STATE OF TEXAS
JOHN BRENT JACKSON
94498
LICENSED
PROFESSIONAL ENGINEER
3/27/2024

DATE: DEC 2025

PROJECT TITLE:

PORT ARTHUR TRANSIT PARKING LOT

DRAWING TITLE:

PLANS

DRAWING NUMBER: S2.01

SHEET NUMBER: 42

SHEET TOTAL: 59

SCALE: As indicated

DRAWN BY: JCG

CHECKED BY: JBJ

C:\Users\bjackson\OneDrive - RLG, Inc\Documents\2115.165_Struct_

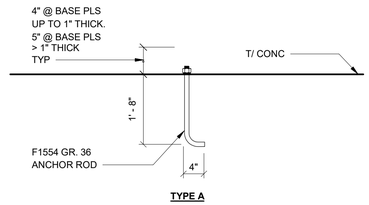

07 **TYPICAL ANCHOR RODS**

NOTE: USE TYPE "A" RODS (UNO)

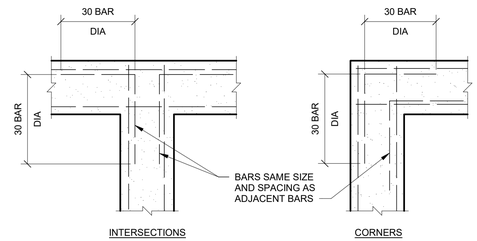

04 **TYPICAL CORNER BARS**

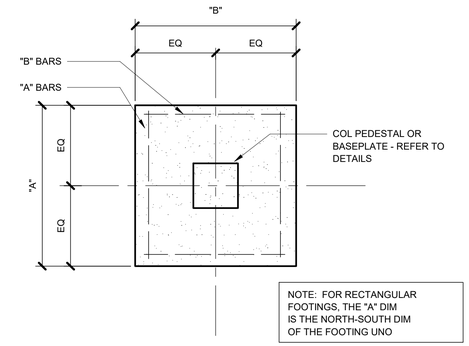

NOTE: FOR RECTANGULAR FOOTINGS, THE "A" DIM IS THE NORTH-SOUTH DIM OF THE FOOTING UNO

SPREAD FOOTING SCHEDULE						
MARK	DIMENSIONS			REINFORCING		NOTES
	"A"	"B"	"T"	A BARS	B BARS	
F 1	8'-8"	8'-8"	24"	7- #7 BOT	7- #7 BOT	REINF TOP & BOTTOM

01 **TYPICAL SPREAD FOOTING PLAN AND SCHEDULE**

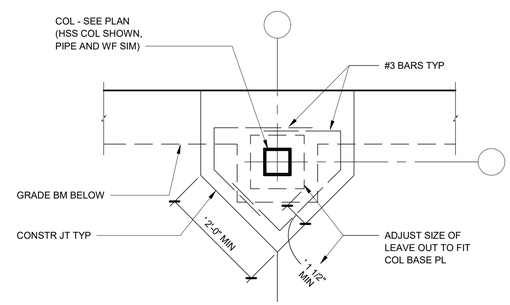

05 **TYPICAL CONSTRUCTION JOINT AT EXTERIOR COLUMN**

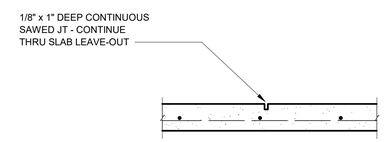

NOTE: JOINTS MUST BE CUT WITHIN 8 HRS AFTER POUR

02 **TYPICAL SLAB ON GRADE SAWED JOINT**

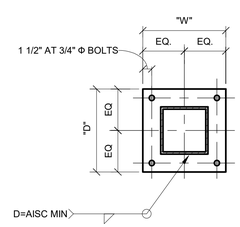

HSS

BASE PLATE SCHEDULE						
COLUMN	D	W	T	RODS	TYPE	COMMENTS
HSS5X5X1/4	12"	12"	1"	4-3/4" DIA"	A	-

NOTE: PROVIDE AISC STANDARD OVERSIZED BOLT HOLES FOR ALL BASE PLATES.

TYPICAL BASE PLATE SCHEDULE

06

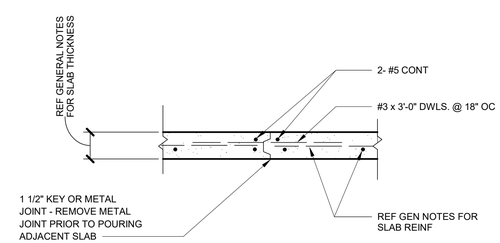

03 **TYPICAL SLAB ON GRADE CONSTRUCTION JOINT**

KSA
1111 Hawn Avenue
Shreveport, LA 71107
T.318.221.7501 F.318.221.7635
www.ksaeng.com
TBPE Firm Registration No. F-1356
03/27/2024

RLG CONSULTING ENGINEERS
PROJECT #2115.165
12001 N. CENTRAL EXPRESSWAY, SUITE 300
DALLAS, TEXAS 75243 214-739-8100
www.rlginc.com FIRM REG: F-493

COPYRIGHT
ALL REPORTS, PLANS, SPECIFICATIONS, COMPUTER FILES, FIELD DATA, NOTES AND OTHER DOCUMENTS AND ANY INSTRUMENTS PREPARED BY KSA, AS INSTRUMENTS OF SERVICE SHALL REMAIN THE PROPERTY OF KSA. KSA SHALL RETAIN ALL COMMON LAW, STATUTORY AND OTHER PRESERVED RIGHTS, INCLUDING THE COPYRIGHT THERETO. COPYING OR REPRODUCTION OF INSTRUMENTS OF SERVICE WITHOUT THE EXPRESS CONSENT OF KSA IS STRICTLY PROHIBITED.

City of Port Arthur Texas

TBPE FIRM #22626

NO.	DATE	REVISION

GENERAL NOTES:

STATE OF TEXAS
JOHN BRENT JACKSON
94498
LICENSED
PROFESSIONAL ENGINEER
3/27/24

DATE: DEC 2025

PROJECT TITLE:

PORT ARTHUR TRANSIT PARKING LOT

DRAWING TITLE:

TYPICAL DETAILS - FOUNDATION

DRAWING NUMBER: S3.01

SHEET NUMBER: 43

SHEET TOTAL: 59

SCALE: 3/4" = 1'-0"

DRAWN BY: JCG

CHECKED BY: JBJ

C:\Users\bjackson\OneDrive - RLG, Inc\Documents\2115.165_Struct_
R23_bjackson.rvt

BOLT TIGHTENING METHOD:
DO **NOT** OVER TIGHTEN BEARING TYPE BOLTS. THIS LEADS TO "BOLT BANGING" IN THE COMPLETED STRUCTURE. BEARING TYPE BOLTED CONNECTIONS SHALL BE TIGHTENED TO A SNUG TIGHT FIT. SUBSTITUTION OF TWIST OFF TYPE TENSION CONTROL BOLTS IN LIEU OF STANDARD BEARING TYPE BOLTS WILL BE ALLOWED PROVIDED CONNECTIONS ARE BROUGHT TO A SNUG TIGHT FIT, WITHOUT SEVERING SPLINED ENDS OR OVER TIGHTENING. OVER TIGHTENING OR SEVERING SPLINED ENDS WILL BE CAUSE OF REJECTION.

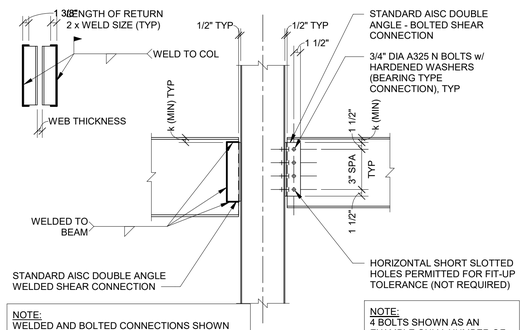

NOTE:
WELDED AND BOLTED CONNECTIONS SHOWN COMBINATION WELDED-BOLTED CONNECTIONS PERMITTED REFER TO PART IV, AISC MANUAL ALL CONNECTIONS TO PROVIDE MINIMUM SHEAR CAPACITY INDICATED IN TABLE OR ON PLANS

NOTE:
4 BOLTS SHOWN AS AN EXAMPLE ONLY. NUMBER OF BOLTS TO BE DETERMINED PER PART IV, AISC MANUAL

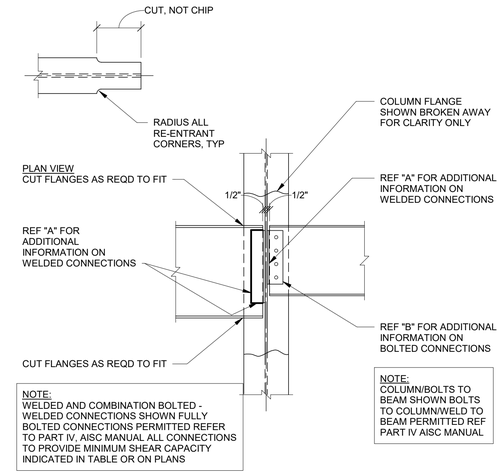

NOTE:
WELDED AND COMBINATION BOLTED - WELDED CONNECTIONS SHOWN FULLY BOLTED CONNECTIONS PERMITTED REFER TO PART IV, AISC MANUAL ALL CONNECTIONS TO PROVIDE MINIMUM SHEAR CAPACITY INDICATED IN TABLE OR ON PLANS

NOTE:
COLUMN/BOLTS TO BEAM SHOWN BOLTS TO COLUMN/WELD TO BEAM PERMITTED REF PART IV AISC MANUAL

A WELDED CONNECTION **B BOLTED CONNECTION** **C WELDED CONNECTION** **D COMBINATION BOLTED-WELDED CONNECTION**

01 **TYPICAL BEAM TO COLUMN FRAMING CONNECTIONS**

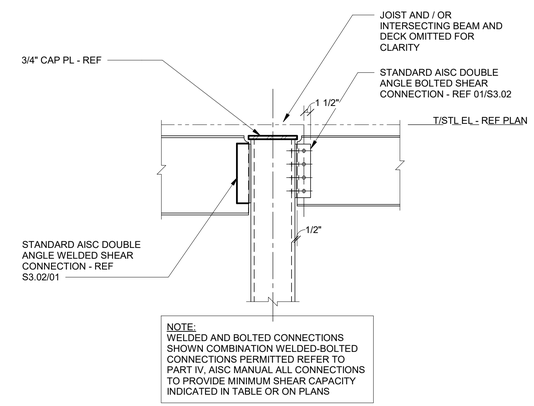

NOTE:
WELDED AND BOLTED CONNECTIONS SHOWN COMBINATION WELDED-BOLTED CONNECTIONS PERMITTED REFER TO PART IV, AISC MANUAL ALL CONNECTIONS TO PROVIDE MINIMUM SHEAR CAPACITY INDICATED IN TABLE OR ON PLANS

WELDED CONNECTION **BOLTED CONNECTION**

02 **TYPICAL COLUMN TOP AT BEAMS**

KSA
1111 Hawn Avenue
Shreveport, LA 71107
T.318.221.7501 F.318.221.7635
www.ksaeng.com
TBPE Firm Registration No. F-1356
03/27/2024

RLG CONSULTING ENGINEERS
PROJECT #2115.165
12001 N. CENTRAL EXPRESSWAY, SUITE 300
DALLAS, TEXAS 75243 214-739-8100
www.rlginc.com FIRM REG: F-493

COPYRIGHT
ALL REPORTS, PLANS, SPECIFICATIONS, COMPUTER FILES, FIELD DATA, NOTES AND OTHER DOCUMENTS AND ANY INSTRUMENTS PREPARED BY KSA. AS INSTRUMENTS OF SERVICE SHALL REMAIN THE PROPERTY OF KSA. KSA SHALL RETAIN ALL COMMON LAW, STATUTORY AND OTHER PRESERVED RIGHTS, INCLUDING THE COPYRIGHT THERETO. COPYING OR REPRODUCTION OF INSTRUMENTS OF SERVICE WITHOUT THE EXPRESS CONSENT OF KSA IS STRICTLY PROHIBITED.

City of Port Arthur Texas

TBPE FIRM #22626

NO.	DATE	REVISION

GENERAL NOTES:

STATE OF TEXAS
JOHN BRENT JACKSON
94498
LICENSED
PROFESSIONAL ENGINEER
3/27/2024

DATE: DEC 2025

PROJECT TITLE:
PORT ARTHUR TRANSIT PARKING LOT

DRAWING TITLE:
TYPICAL DETAILS - STEEL FRAMING

DRAWING NUMBER: S4.02

SHEET NUMBER: 44 SHEET TOTAL: 59

SCALE: 3/4" = 1'-0"

DRAWN BY: JCG CHECKED BY: JBJ

C:\Users\bjackson\OneDrive - RLG, Inc\Documents\2115.165_Struct_

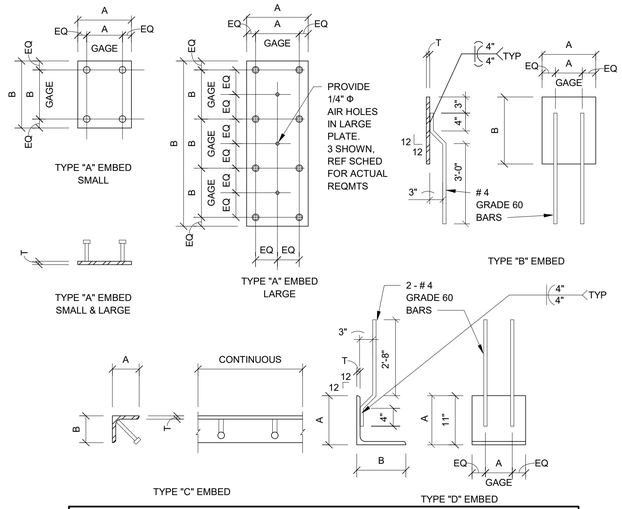

EMBED SCHEDULE										
MARK	PL TYPE	PLATE SIZE			HEADED STUDS			A GA	B GA	REMARKS
		T	A	B	QT'Y	DIA	LENGTH			
E 1	A	1/2"	PANEL WIDTH	8"	2	3/4" Φ	6"	-	5"	BOTTOM OF PANELS
E 2	A	1/2"	8"	8"	4	3/4" Φ	NOTE # 2	5"	5"	PANEL TO PANEL
E 3	A	3/8"	4"	8"	2	1/2" Φ	4"	-	5"	PANEL TO PANEL AND DECK CONNX
E 4	A	1/2"	12"	14"	4	3/4" Φ	NOTE # 2	8"	7"	BEAM CONNX W6 - W8 & ROOF JST CONNX CONFORM TO NOTE # 3.
E 5	A	1/2"	12"	10"	4	3/4" Φ	NOTE # 2	7"	6"	FLOOR JST CONNX CONFORM TO NOTE # 3.
E 6	A	1/2"	12"	21"	6	3/4" Φ	NOTE # 2	8"	7"	BEAM W10 - W16 JST GIRDER ≤32" CONFORM TO NOTE # 3.
E 7	A	3/8"	4"	4"	1	3/4" Φ	NOTE # 2	-	-	BLOCKING
E 8	A	1/2"	12"	28"	8	3/4" Φ	NOTE # 2	8"	7"	BEAM W18 - W21 JST GIRDER 33" - 54" CONFORM TO NOTE # 3. PROVIDE 3 - 1/4" Φ AIR HOLES.
E 9	C	3/8"	3"	3"	@ 12"	3/4" Φ	6"	-	-	CONT DECK ANGLE
E 10	A	3/4"	12"	35"	10	3/4" Φ	NOTE # 2	8"	7"	BEAM W24 - W27 JST GIRDER 55" - 72" CONFORM TO NOTE # 3. PROVIDE 4 - 1/4" Φ AIR HOLES.
E 11	B	1/2"	12"	8"	-	-	-	8"	-	
E 12	A	3/4"	12"	42"	12	3/4" Φ	NOTE # 2	8"	7"	BEAM W30 - W36 CONFORM TO NOTE # 3. PROVIDE 5- 1/4" Φ AIR HOLES.
E 13	B	1/2"	-	10 1/2"	-	-	-	6	-	"A" DIM = PANEL WIDTH MINUS 1 1/2" (SPANDREL)
E 14	B	1/2"	8"	8"	-	-	-	5	-	
E 15	D	3/8"	6"	6"	-	-	-	5	-	8" LONG
E 16										

SCHEDULE NOTES :

1. EMBEDS NOT REFERENCED ON DETAILS ARE NOT USED.
2. PANELS 5 1/2" THICK - USE 4" LONG HEADED STUDS.
   PANELS 7 1/4" THICK - USE 5" LONG HEADED STUDS.
   PANELS 9 1/4" THICK - USE 6" LONG HEADED STUDS.
3. EMBEDS SUPPORTING JOISTS, JOIST GIRDERS AND BEAMS SHALL BE SECURELY ANCHORED IN PLACE PRIOR TO CASTING PANEL.

03

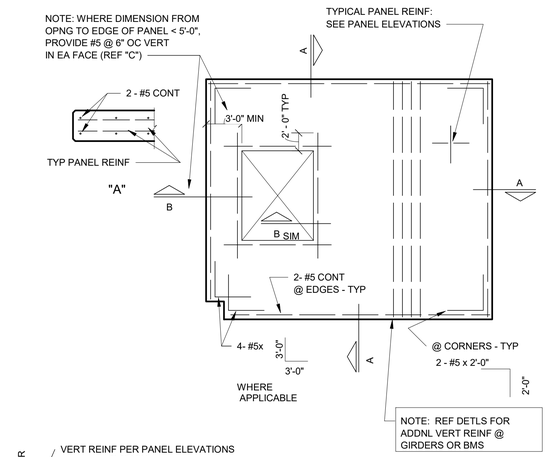

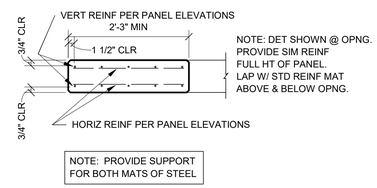

01 **TYPICAL PANEL REINFORCING**

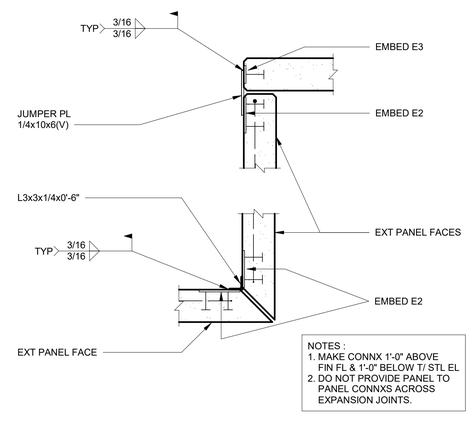

02 **TYPICAL PANEL TO PANEL CONNECTIONS**

KSA
1111 Hawn Avenue
Shreveport, LA 71107
T.318.221.7501 F.318.221.7635
www.ksaeng.com
TBPE Firm Registration No. F-1356
03/27/2024

RLG CONSULTING ENGINEERS
PROJECT #2115.165
12001 N. CENTRAL EXPRESSWAY, SUITE 300
DALLAS, TEXAS 75243 214-739-8100
www.rlginc.com FIRM REG: F-493

COPYRIGHT
ALL REPORTS, PLANS, SPECIFICATIONS, COMPUTER FILES, FIELD DATA, NOTES AND OTHER DOCUMENTS AND ANY INSTRUMENTS PREPARED BY KSA, AS INSTRUMENTS OF SERVICE SHALL REMAIN THE PROPERTY OF KSA. KSA SHALL RETAIN ALL COMMON LAW, STATUTORY AND OTHER PRESERVED RIGHTS, INCLUDING THE COPYRIGHT THERETO. COPYING OR REPRODUCTION OF INSTRUMENTS OF SERVICE WITHOUT THE EXPRESS CONSENT OF KSA IS STRICTLY PROHIBITED.

City of Port Arthur Texas

TBPE FIRM #22626

NO.	DATE	REVISION

GENERAL NOTES:

STATE OF TEXAS
JOHN BRENT JACKSON
94498
LICENSED
PROFESSIONAL ENGINEER
3/27/24

DATE: DEC 2025

PROJECT TITLE:

PORT ARTHUR TRANSIT PARKING LOT

DRAWING TITLE:

TYPICAL DETAILS - CONCRETE TILT WALLS

DRAWING NUMBER: S4.01

SHEET NUMBER: 45 SHEET TOTAL: 59

SCALE: 3/4" = 1'-0"

DRAWN BY: JCG CHECKED BY: JBJ

C:\Users\jbjackson\OneDrive - RLG, Inc\Documents\2115.165_Struct_Rev\2115.165_Struct_R23_bjackson.LANB.rvt

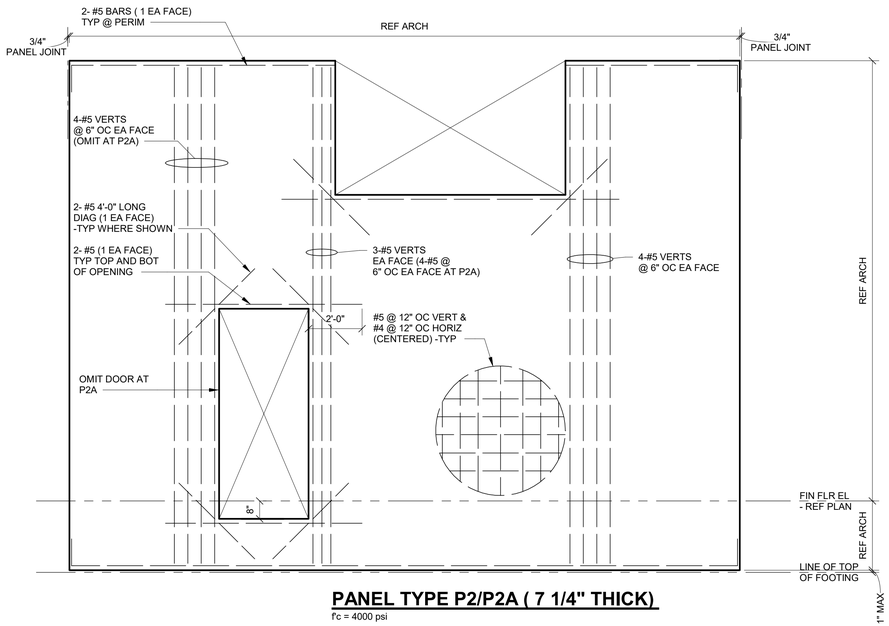

PANEL TYPE P2/P2A (7 1/4" THICK)

f'c = 4000 psi

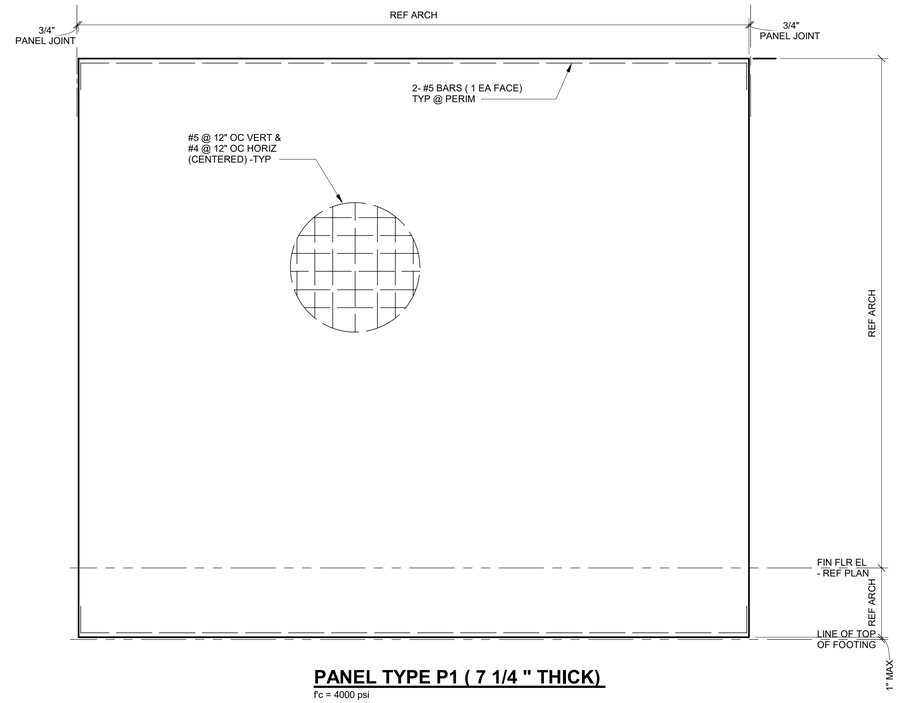

PANEL TYPE P1 (7 1/4 " THICK)

f'c = 4000 psi

City of Port Arthur Texas

TBPE FIRM #22626

NO.	DATE	REVISION

GENERAL NOTES:

STATE OF TEXAS
JOHN BRENT JACKSON
84498
LICENSED
PROFESSIONAL ENGINEER
3/31/2024

DATE: DEC 2025

PROJECT TITLE:

PORT ARTHUR TRANSIT
PARKING LOT

DRAWING TITLE:

TILT PANEL ELEVATIONS

DRAWING NUMBER:
S4,02

SHEET NUMBER: 46

SHEET TOTAL: 59

SCALE: 3/8" = 1'-0"

DRAWN BY: Author

CHECKED BY: Checker

KSA
1111 Hawn Avenue
Shreveport, LA 71107
T.318.221.7501 F.318.221.7635
www.ksaeng.com
TBPE Firm Registration No. F-1356

03/27/2024

RLG CONSULTING ENGINEERS
PROJECT #2115.165
12001 N. CENTRAL EXPRESSWAY, SUITE 300
DALLAS, TEXAS 75243 214-739-8100
www.rlginc.com FIRM REG: F-493

COPYRIGHT
ALL REPORTS, PLANS, SPECIFICATIONS, COMPUTER FILES, FIELD DATA, NOTES AND OTHER DOCUMENTS AND ANY INSTRUMENTS PREPARED BY KSA, AS INSTRUMENTS OF SERVICE SHALL REMAIN THE PROPERTY OF KSA. KSA SHALL RETAIN ALL COMMON LAW, STATUTORY AND OTHER RIGHTS, INCLUDING THE COPYRIGHT THERETO. COPYING OR REPRODUCTION OF INSTRUMENTS OF SERVICE WITHOUT THE EXPRESS CONSENT OF KSA IS STRICTLY PROHIBITED.

C:\Users\bjackson\OneDrive - RLG, Inc\Documents\2115.165_Struct_
Bldg\Services\Structural_R23_bjackson.UANB.rvt

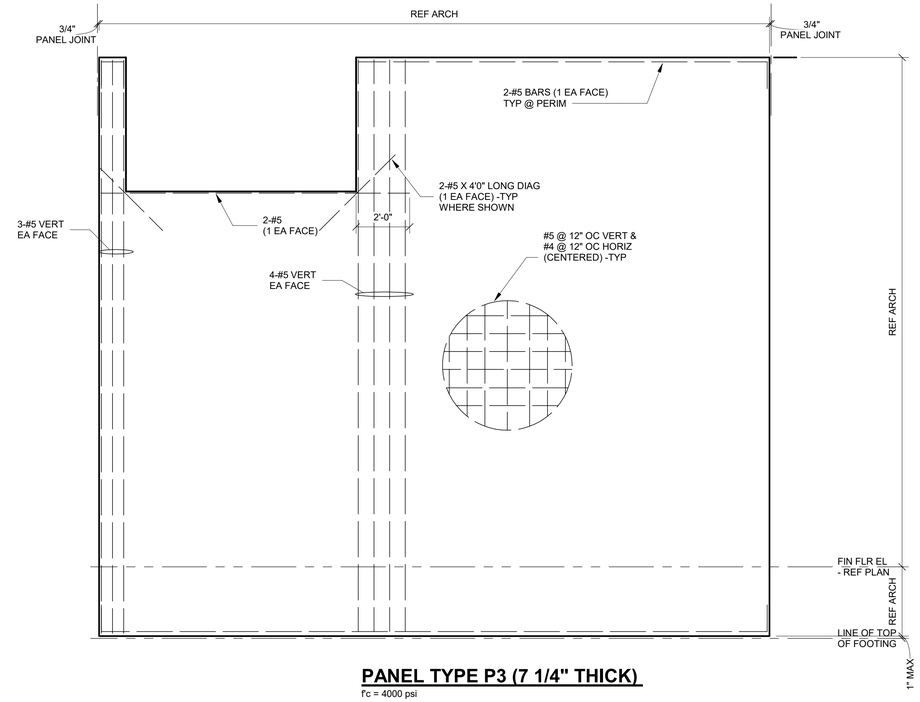

PANEL TYPE P3 (7 1/4" THICK)

f'c = 4000 psi

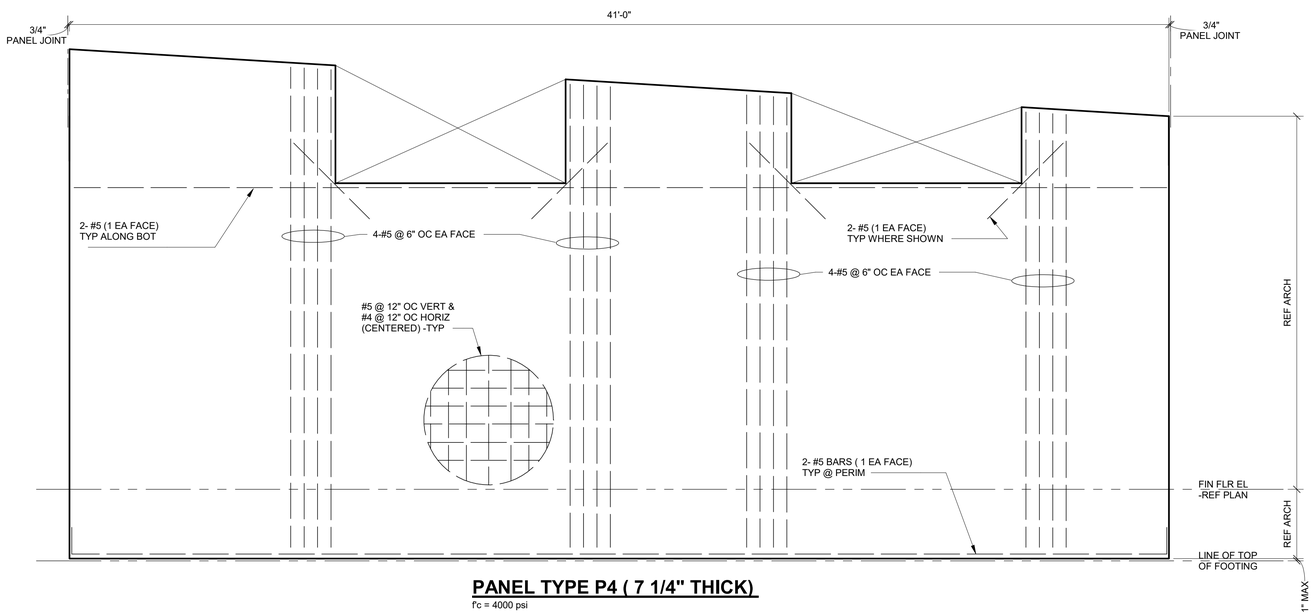

PANEL TYPE P4 (7 1/4" THICK)

f'c = 4000 psi

KSA
1111 Hawn Avenue
Shreveport, LA 71107
T.318.221.7501 F.318.221.7635
www.ksaeng.com
TBPE Firm Registration No. F-1356

03/27/2024

RLG CONSULTING ENGINEERS
PROJECT #2115.165
12001 N. CENTRAL EXPRESSWAY, SUITE 300
DALLAS, TEXAS 75243 214-739-8100
www.rlginc.com FIRM REG: F-493

COPYRIGHT
ALL REPORTS, PLANS, SPECIFICATIONS, COMPUTER FILES, FIELD DATA, NOTES AND OTHER DOCUMENTS AND INSTRUMENTS PREPARED BY KSA AS INSTRUMENTS OF SERVICE SHALL REMAIN THE PROPERTY OF KSA. KSA SHALL RETAIN ALL COMMON LAW, STATUTORY AND OTHER PRESERVED RIGHTS, INCLUDING THE COPYRIGHT THERETO. COPYING OR REPRODUCTION OF INSTRUMENTS OF SERVICE WITHOUT THE EXPRESS CONSENT OF KSA IS STRICTLY PROHIBITED.

City of Port Arthur Texas

TBPE FIRM #22626

NO.	DATE	REVISION

GENERAL NOTES:

STATE OF TEXAS
JOHN BRENT JACKSON
94498
LICENSED
PROFESSIONAL ENGINEER
3/27/2024

DATE: DEC 2025

PROJECT TITLE:

PORT ARTHUR TRANSIT PARKING LOT

DRAWING TITLE:

TILT PANEL ELEVATIONS

DRAWING NUMBER: S4.03

SHEET NUMBER: 47

SHEET TOTAL: 59

SCALE: 3/8" = 1'-0"

DRAWN BY: Author

CHECKED BY: Checker

C:\Users\bjackson\OneDrive - RLG, Inc\Documents\2115.165_Struct_

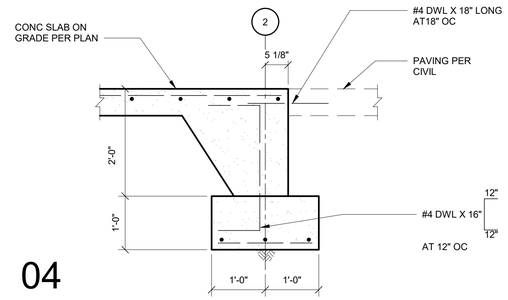

04

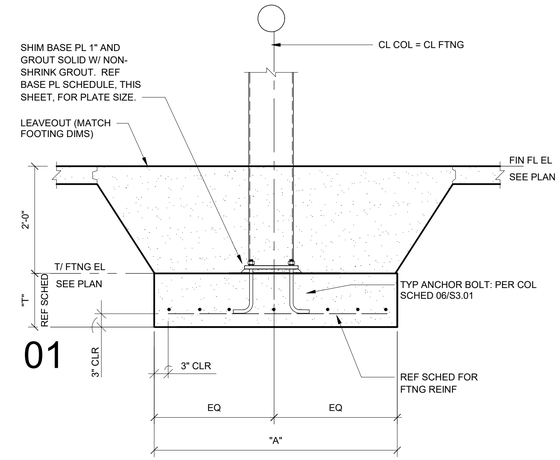

01

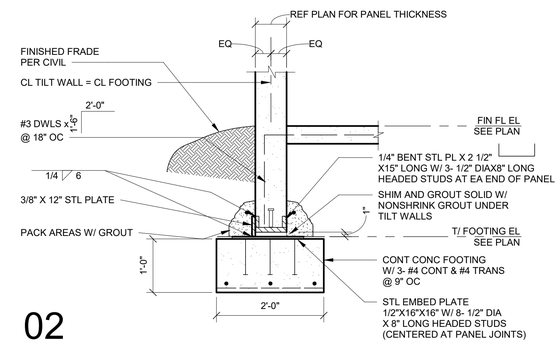

02

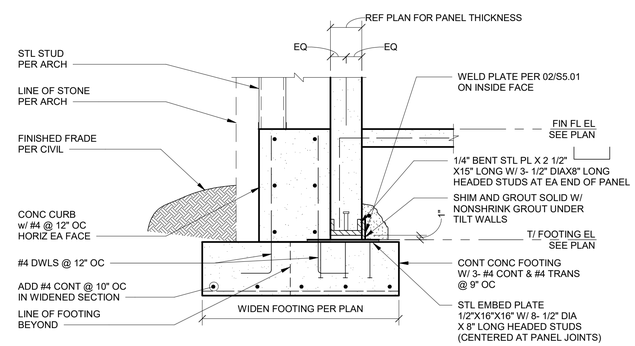

NOTE: SEE 02/S5.01 FOR ADDL INFO

03

KSA
1111 Hawn Avenue
Shreveport, LA 71107
T.318.221.7501 F.318.221.7635
www.ksaeng.com
TBPE Firm Registration No. F-1356
03/27/2024

RLG CONSULTING ENGINEERS
PROJECT #2115.165
12001 N. CENTRAL EXPRESSWAY, SUITE 300
DALLAS, TEXAS 75243 214-739-8100
www.rlginc.com FIRM REG: F-493

COPYRIGHT
ALL REPORTS, PLANS, SPECIFICATIONS, COMPUTER FILES, FIELD DATA, NOTES AND OTHER DOCUMENTS AND ANY INSTRUMENTS PREPARED BY KSA AS INSTRUMENTS OF SERVICE SHALL REMAIN THE PROPERTY OF KSA. KSA SHALL RETAIN ALL COMMON LAW, STATUTORY AND OTHER PRESERVED RIGHTS, INCLUDING THE COPYRIGHT THERETO. COPYING OR REPRODUCTION OF INSTRUMENTS OF SERVICE WITHOUT THE EXPRESS CONSENT OF KSA IS STRICTLY PROHIBITED.

City of Port Arthur Texas

TBPE FIRM #22626

NO.	DATE	REVISION

GENERAL NOTES:

STATE OF TEXAS
JOHN BRENT JACKSON
94498
LICENSED
PROFESSIONAL ENGINEER
3/27/24

DATE: DEC 2025

PROJECT TITLE:

PORT ARTHUR TRANSIT PARKING LOT

DRAWING TITLE:

FOUNDATION DETAILS

DRAWING NUMBER: S5.01

SHEET NUMBER: 48

SHEET TOTAL: 59

SCALE: 3/4" = 1'-0"

DRAWN BY: JCG

CHECKED BY: JBJ

C:\Users\jbjackson\OneDrive - RLG, Inc\Documents\2115.165_Struct_

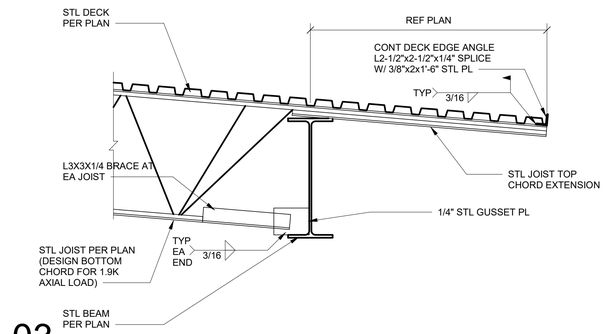

03

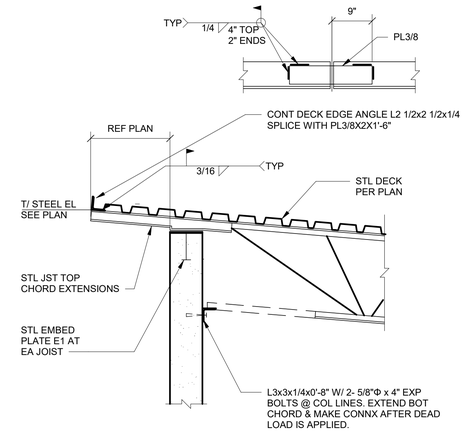

01

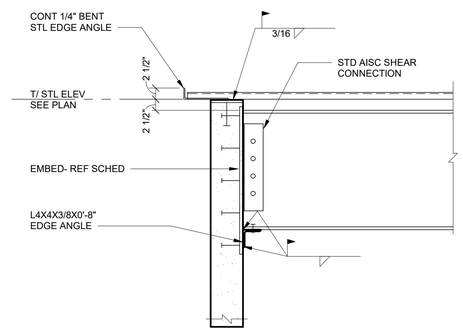

04

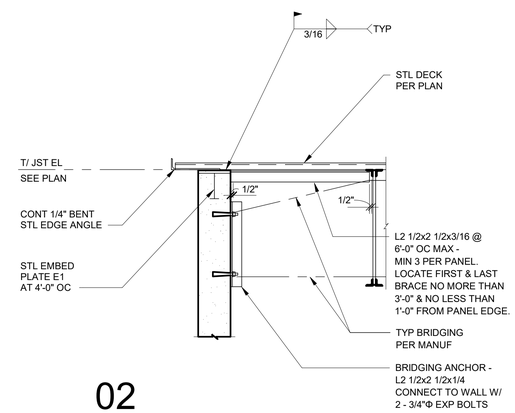

02

City of Port Arthur Texas

TBPE FIRM #22626

NO.	DATE	REVISION

GENERAL NOTES:

DATE: DEC 2025

PROJECT TITLE:

PORT ARTHUR TRANSIT
PARKING LOT

DRAWING TITLE:

FRAMING DETAILS

DRAWING NUMBER: S6.01

SHEET NUMBER: 49

SHEET TOTAL: 59

SCALE: 3/4" = 1'-0"

DRAWN BY: JCG

CHECKED BY: JBJ

KSA
1111 Hawn Avenue
Shreveport, LA 71107
T.318.221.7501 F.318.221.7635
www.ksaeng.com
TBPE Firm Registration No. F-1356

03/27/2024

RLG CONSULTING ENGINEERS
PROJECT #2115.165
12001 N. CENTRAL EXPRESSWAY, SUITE 300
DALLAS, TEXAS 75243 214-739-8100
www.rlginc.com FIRM REG: F-493

COPYRIGHT
ALL REPORTS, PLANS, SPECIFICATIONS, COMPUTER FILES, FIELD DATA, NOTES AND OTHER DOCUMENTS AND ANY INSTRUMENTS PREPARED BY KSA. AS INSTRUMENTS OF SERVICE SHALL REMAIN THE PROPERTY OF KSA. KSA SHALL RETAIN ALL COMMON LAW, STATUTORY AND OTHER PRESERVED RIGHTS, INCLUDING THE COPYRIGHT THERETO. COPYING OR REPRODUCTION OF INSTRUMENTS OF SERVICE WITHOUT THE EXPRESS CONSENT OF KSA IS STRICTLY PROHIBITED.

C:\Users\bjackson\OneDrive - RLG, Inc\Documents\2115.165_Struct_
RLG_Structural_Design_R23_bjackson.JANB.rvt

ABBREVIATIONS

(ALL ABBREVIATIONS SHOWN ARE NOT NECESSARILY USED ON DRAWINGS)

A

A/C	AIR CONDITIONING
ABV	ABOVE
AC	ALTERNATING CURRENT
ADJ	ADJUSTABLE
AF	AMPERE FUSE
AFF	ABOVE FINISHED FLOOR
AFG	ABOVE FINISHED GRADE
AIC	AMPERE INTERRUPTING CURRENT
AL	ALUMINUM
A, AMPS	AMPERES
ANSI	AMERICAN NATIONAL STANDARDS INSTITUTE
ARCH	ARCHITECT, ARCHITECTURAL
AS	AMPERE SWITCH
AUX	AUXILIARY
AWG	AMERICAN WIRE GAUGE

B

BKR	BREAKER
BLDG	BUILDING
BLEP	BLUE LIGHT EMERGENCY PHONE

C

C	CONDUIT
CATV	CABLE TELEVISION SYSTEM
CCTV	CLOSED CIRCUIT TELEVISION
CKT	CIRCUIT
℄	CENTERLINE
CLG	CEILING
CR	CARD READER
CU	COPPER
CB	CODE BLUE

D

DC	DIRECT CURRENT
DIA	DIAMETER
DISC	DISCONNECT
DN	DOWN
DPDT	DOUBLE-POLE, DOUBLE-THROW
DPST	DOUBLE-POLE, SINGLE-THROW
DWG	DRAWING

E

EA	EACH
EF	EXHAUST FAN
ELEC	ELECTRICAL
ENCL	ENCLOSURE
EQUIP	EQUIPMENT
EWC	ELECTRICAL WATER COOLER
EXH	EXHAUST
EXIST	EXISTING

F

FO	FIBER OPTIC
FA	FIRE ALARM
FACP	FIRE ALARM CONTROL PANEL
FLA	FULL LOAD AMPS
FLEX	FLEXIBLE
FVNR	FULL-VOLTAGE, NON-REVERSING
FV2SP	FULL-VOLTAGE, TWO SPEED

G

G,GND	GROUND
GA	GAUGE
GC	GATE CONTROL
GALV	GALVANIZED
GFI	GROUND FAULT INTERRUPTER
GFR	GROUND FAULT RELAY

H

HOA	HAND-OFF-AUTO
HORIZ	HORIZONTAL
HP	HORSEPOWER
HTR	HEATER
HVAC	HEATING, VENTILATION, AND AIR CONDITIONING
HZ	HERTZ

I

ID	INSIDE DIAMETER
IEEE	INSTITUTE OF ELECTRICAL AND ELECTRONICS ENGINEERS
IES	ILLUMINATING ENGINEERING SOCIETY
IG	ISOLATED GROUND

J

J-BOX	JUNCTION BOX

K

KCMIL	1000 CIRCULAR MILS
KV	KILOVOLT
KVA	KILOVOLT-AMPS
KW	KILOWATT
KWH	KILOWATT-HOUR

L

LF	LINEAR FEET
LRA	LOCKED ROTOR AMPS
LSIG	BREAKER GROUND TRIP, LONG/SHORT/INSTANT GROUND FAULT
LTG	LIGHTING

M

MAX	MAXIMUM
MCA	MINIMUM CIRCUIT AMPACITY
MCB	MAIN CIRCUIT BREAKER
MD	MOTORIZED DAMPER
MECH	MECHANICAL
MFGR	MANUFACTURER
MG	MOTOR GENERATOR
MIN	MINIMUM
MLO	MAIN LUGS ONLY
MTD	MOUNTED

N

N/A	NOT APPLICABLE
N.C.	NORMALLY CLOSED
NEC	NATIONAL ELECTRIC CODE
NEMA	NATIONAL ELECTRIC MANUFACTURER'S ASSOCIATION
NFPA	NATIONAL FIRE PROTECTION ASSOCIATION
NIC	NOT IN CONTRACT
N.O.	NORMALLY OPEN
N.T.S	NOT TO SCALE

O

O.C.	ON CENTER
OD	OUTSIDE DIAMETER
OH	OVERHEAD
OS&Y	OUTSIDE STEM & YOKE

P

PF	POWER FACTOR
PH	PHASE
PIDS	PERIMETER INTRUSION DETECTION SYSTEM
PLBG	PLUMBING
PNL	PANEL
PVC	POLYVINYL CHLORIDE

Q

QTY	QUANTITY

R

RA	RETURN AIR
RCP	REFLECTED CEILING PLAN
RE:	REFERENCE, REFER
REQD	REQUIRED
REV	REVISED, REVISION, REVISE
RGS	RIGID GALVANIZED STEEL
RLA	RUNNING LOAD AMPS
RM	ROOM
RPU	REMOTE PROCESSING UNIT

S

SECT	SECTION
SF	SQUARE FEET
SHT	SHEET
STP	SHIELDED TWISTED PAIR
SIM	SIMILAIR
SMGCS	SURFACE MOVEMENT GUIDANCE AND CONTROL SYSTEM
SPEC	SPECIFICATIONS
SQ	SQUARE
SS	STAINLESS STEEL
STD	STANDARD
SURF	SURFACE
SUSP	SUSPEND

T

THRU	THROUGH
TYP	TYPICAL

U

U/F	UNDERFLOOR
U/G	UNDERGROUND
U/S	UNDERSLAB
UL	UNDERWRITERS LABORATORIES, INC.
UON	UNLESS OTHERWISE NOTED
UPS	UNINTERRUPTIBLE POWER SUPPLY
UTP	UNSHIELDED TWISTED PAIR

V

V	VOLT
VA	VOLT-AMPERE
VAC	VACUUM
VERT	VERTICAL
VFD	VARIABLE FREQUENCY DRIVE

W

W	WATT, WIDTH
W/	WITH
W/O	WITHOUT
WP	WEATHER-PROOF

X

XFMR	TRANSFORMER

ELECTRICAL SYMBOLS

(ALL SYMBOLS SHOWN ARE NOT NECESSARILY USED ON DRAWINGS)

LIGHTING

A — 1-FIXTURE, MOUNTED IN CANOPY. LETTER INDICATES TYPE.

RECEPTACLES AND OUTLETS

DUPLEX WALL RECEPTACLE, NEMA 5-20R, 20A, 125V,

CIRCUITING AND WIRING

NEW CONDUIT AND CABLES

EXISTING CONDUIT SHOWN FOR REFERENCE. DARK TEXT INDICATES NEW CABLES IN EXISTING CONDUIT. SHADED TEXT INDICATES EXISTING CABLES IN EXISTING CONDUIT TO REMAIN.

LA-2,4 — HOMERUN TO PANEL WITH CIRCUIT NUMBER(S) AS INDICATED.

PULLBOX

HANDHOLE

UE — UNDERGROUND DUCTBANK

PANEL DESIGNATIONS

HA	"H" DENOTES VOLTAGE - "H"=480Y/277V, "L"=208Y/120V
LA	"A" DENOTES PANEL SEQUENCE
E2HA	"E" DENOTES EMERGENCY POWER

ELECTRICAL EQUIPMENT

UTILITY SERVICE POLE

DRY-TYPE TRANSFORMER

DISCONNECT (SAFETY) SWITCH "200/3/150" DENOTES AMPERES/POLE/FUSE, "NF" DENOTES NON-FUSED

M — ELECTRICAL SERVICE METER

3/4" X 10' COPPER CLAD GROUND ROD WITH GROUNDING CONDUCTOR SIZE AS NOTED.

LIGHTING FIXTURE CIRCUITING NOTES

A. LIMIT BRANCH CIRCUIT HOMERUNS TO A MAXIMUM OF TWO PHASE CONDUCTORS (ON DIFFERENT PHASES), INSTALL INDIVIDUAL NEUTRAL CONDUCTORS (FOR EACH 120V OR 240V BRANCH CIRCUIT), AND ONE GROUND CONDUCTOR IN CONDUIT.

POWER PLAN CIRCUITING NOTES

A. LIMIT BRANCH CIRCUIT HOMERUNS TO A MAXIMUM OF TWO PHASE CONDUCTORS (ON DIFFERENT PHASES), INSTALL INDIVIDUAL NEUTRAL CONDUCTORS (FOR EACH 120V OR 240V BRANCH CIRCUIT), AND ONE GROUND CONDUCTOR IN CONDUIT.

DRAWING/DETAIL REFERENCE KEY

RE:2/E-601 — REFER TO DRAWING/DETAIL NUMBER; SHEET NUMBER

2 / E-601

MISCELLANEOUS

1 — DRAWING NOTE REFERENCE (NOTES BY SYMBOL)

GENERAL NOTES

A. REFER TO SPECIFICATIONS FOR MATERIALS AND METHODS FOR ELECTRICAL CONSTRUCTION. ALL WORK SHALL BE INSTALLED IN ACCORDANCE WITH NFPA 70, LATEST EDITION.

B. ALL CIRCUITING: 2#10, 1#10G, UNLESS NOTED OTHERWISE ON THE DRAWINGS OR IN THE SPECIFICATIONS.

C. MINIMUM SIZE CONDUIT FOR HOMERUNS IS 3/4" C. UNLESS OTHERWISE NOTED

D. ARRANGE WITH AUTHORITIES AND UTILITY COMPANIES FOR PERMITS, FEES, AND SERVICE CONNECTIONS, VERIFYING LOCATIONS AND ARRANGEMENT AND PAYING ALL CHARGES, INCLUDING INSPECTIONS.

E. COORDINATE WORK WITH CIVIL AND/OR ARCHITECTURAL FEATURES AND COORDINATE WORK SO THAT INTERFERENCES BETWEEN CONDUITS, LIGHTING, EQUIPMENT, PAVEMENT WORK, AND LANDSCAPING WILL BE AVOIDED.

F. ENSURE THAT THE ENTIRE SYSTEM AND ITS COMPONENT ITEMS OF EQUIPMENT OPERATES WITHOUT OBJECTIONABLE VIBRATION OR NOISE.

City of Port Arthur Texas

TBPE FIRM #22626

Ferguson Consulting
Aviation Specialists for Electrical, Telecommunications and Security Systems
Ferguson Consulting Inc.
10200 Grogans Mill Rd. Ste. #420
The Woodlands, TX 77380
(281) 252-9232 Firm No. 6864

NO.	DATE	REVISION

GENERAL NOTES:

STATE OF TEXAS — C. LECETTE FERGUSON — 81460 — REGISTERED PROFESSIONAL ENGINEER — F-6864 — 12/10/25

DATE: DEC 2025

PROJECT TITLE:

PORT ARTHUR TRANSIT PARKING LOT

DRAWING TITLE:

ELECTRICAL LEGEND AND ABBREVIATIONS

DRAWING NUMBER: E0.01

SHEET NUMBER 50 — SHEET TOTAL: 59

SCALE: NONE

DRAWN BY: RCF — CHECKED BY: LF

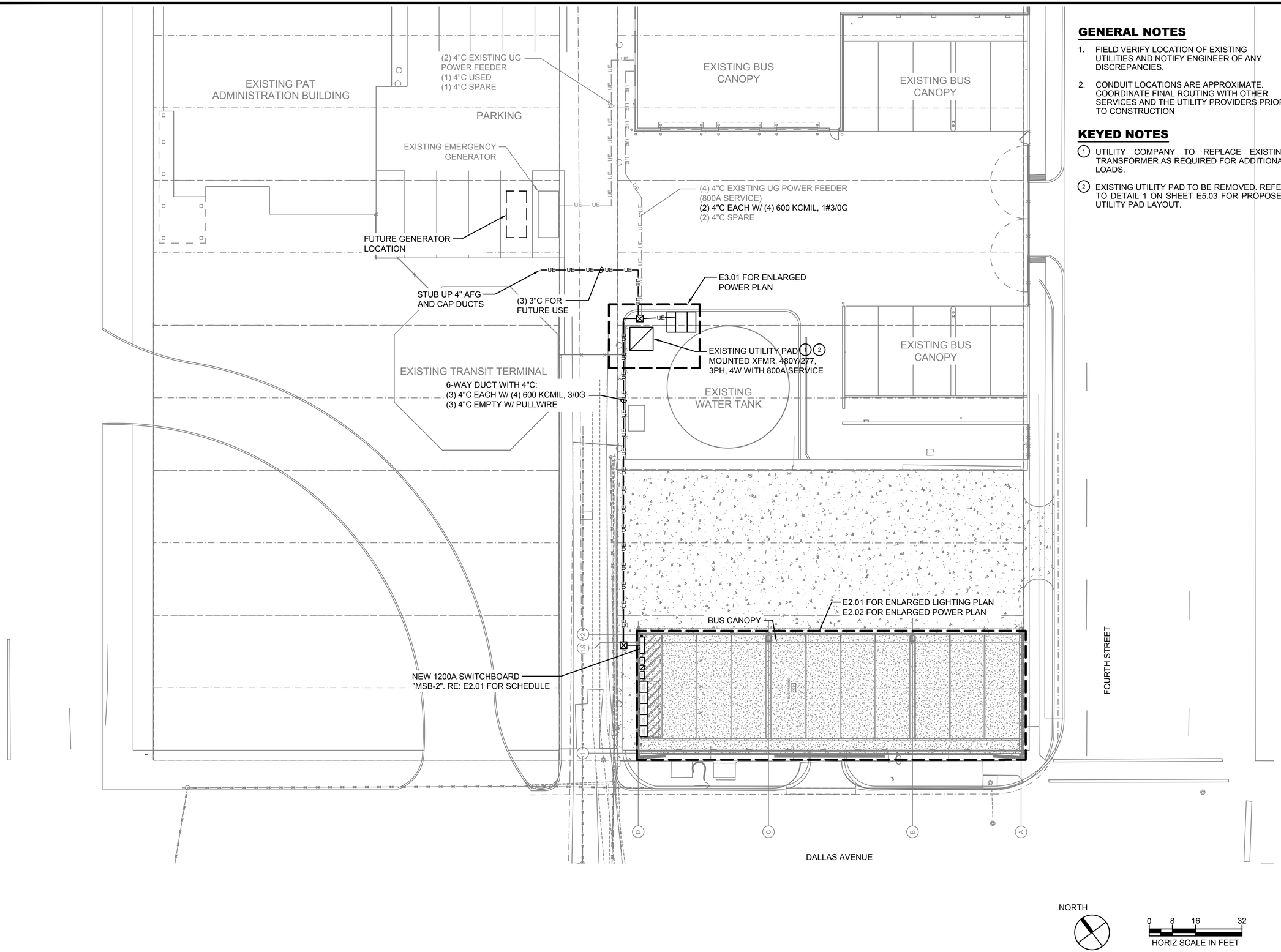

GENERAL NOTES

1. FIELD VERIFY LOCATION OF EXISTING UTILITIES AND NOTIFY ENGINEER OF ANY DISCREPANCIES.
2. CONDUIT LOCATIONS ARE APPROXIMATE. COORDINATE FINAL ROUTING WITH OTHER SERVICES AND THE UTILITY PROVIDERS PRIOR TO CONSTRUCTION

KEYED NOTES

1. UTILITY COMPANY TO REPLACE EXISTING TRANSFORMER AS REQUIRED FOR ADDITIONAL LOADS.
2. EXISTING UTILITY PAD TO BE REMOVED. REFER TO DETAIL 1 ON SHEET E5.03 FOR PROPOSED UTILITY PAD LAYOUT.

City of Port Arthur Texas

TBPE FIRM #22626

Ferguson Consulting
Aviation Specialists for Electrical, Telecommunications and Security Systems
Ferguson Consulting Inc.
10200 Grogans Mill Rd. Ste. #420
The Woodlands, TX 77380
(281) 252-9232 Firm No. 6864

NO.	DATE	REVISION

GENERAL NOTES:

STATE OF TEXAS
C. LECETTE FERGUSON
81460
REGISTERED PROFESSIONAL ENGINEER
F-6864
12/10/25

DATE: DEC 2025

PROJECT TITLE:

PORT ARTHUR TRANSIT PARKING LOT

DRAWING TITLE:

ELECTRICAL SITE PLAN

DRAWING NUMBER: E1.01

SHEET NUMBER: 51

SHEET TOTAL: 59

SCALE: 1" = 16'-0"

DRAWN BY: RCF

CHECKED BY: LF

GENERAL NOTES

1. REFER TO SHEET E0.01 FOR ADDITIONAL NOTES, LEGENDS, AND SYMBOLS.

KEYED NOTES

1. PHOTOCELL TO BE MOUNTED AT SPECIFIED FIXTURE LOCATION. AIM TO NORTH. LOCATE ABOVE OVERHANG.
2. INSTALL IN N4X ENCLOSURE WITH HINGED DOOR AND LOCKABLE HANDLE. ADD ENGRAVED LABEL ON DOOR.

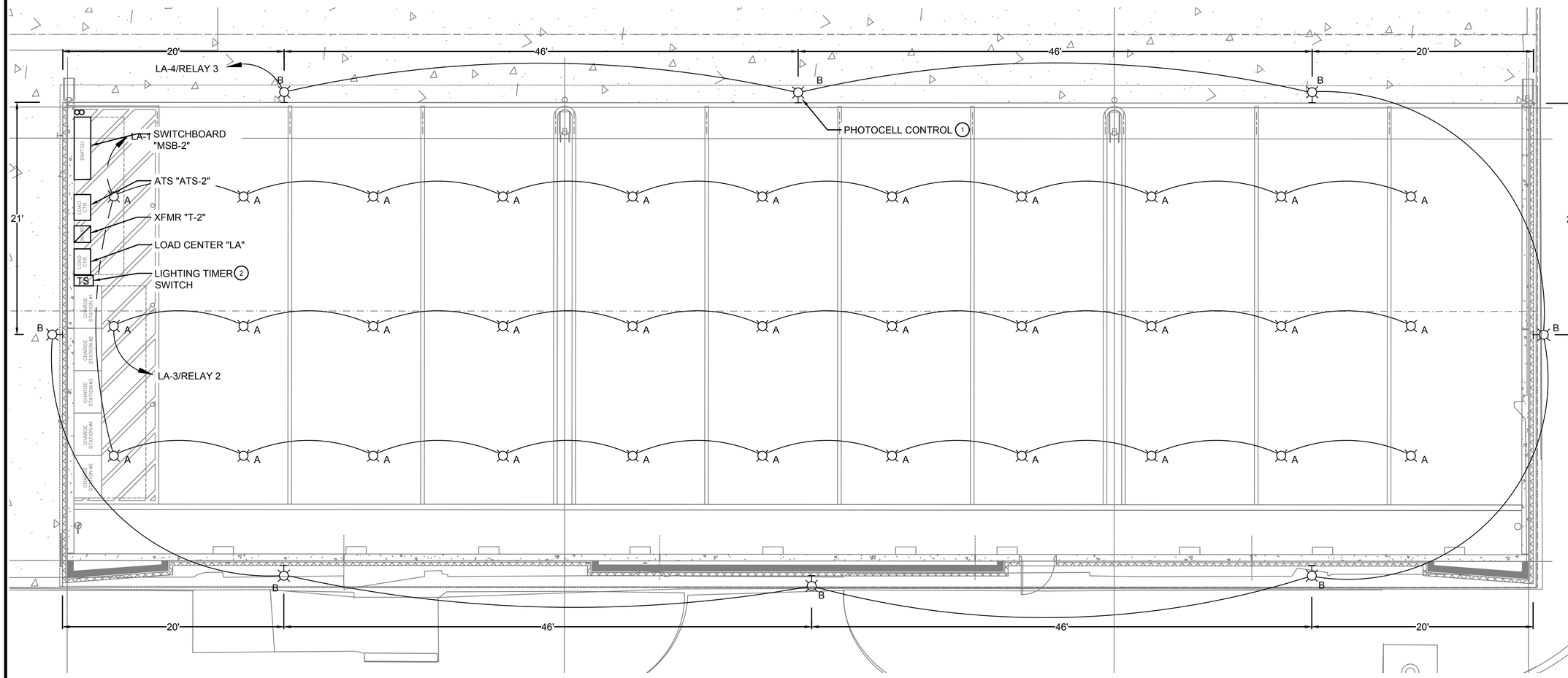

1 / E-101

BUS CANOPY LIGHTING PLAN

SCALE: 1/2" = 1'-0"

LIGHT FIXTURE SCHEDULE

TYPE	MANUFACTURER/DESCRIPTION	VOLTAGE	LAMPS			MOUNTING	REMARKS
			NO.	TYPE	COLOR		
A	CNY LED CANOPY LIGHT CNY-LED-P1-40K-MVOLT	MVOLT	1	LED	4000K	JBOX	
B	WST LED WALL SCONCE WST-LED-P2-40K-VW-MVOLT	MVOLT	1	LED	4000K	SURFACE MOUNT BRACKET	

NORTH

0 2.5 5 10
HORIZ SCALE IN FEET

City of Port Arthur Texas

TBPE FIRM #22626

Ferguson Consulting
Aviation Specialists for Electrical, Telecommunications and Security Systems
Ferguson Consulting Inc.
10200 Grogans Mill Rd. Ste. #420
The Woodlands, TX 77380
(281) 252-9232 Firm No. 6864

NO.	DATE	REVISION

GENERAL NOTES:

STATE OF TEXAS
C. LECETTE FERGUSON
81460
REGISTERED PROFESSIONAL ENGINEER
F-6864
12/10/25

DATE: DEC 2025

PROJECT TITLE:
PORT ARTHUR TRANSIT PARKING LOT

DRAWING TITLE:
BUS CANOPY LIGHTING PLAN

DRAWING NUMBER: E2.01

SHEET NUMBER: 52 | SHEET TOTAL: 59

SCALE: 1" = 5'-0"

DRAWN BY: RCF | CHECKED BY: LF

GENERAL NOTES

1. REFER TO SHEET E0.01 FOR ADDITIONAL NOTES, LEGENDS, AND SYMBOLS.
2. ALL CONDUIT BELOW 6' AFF TO BE RGS. ALL CONDUIT ISTALLED ABOVE 6' AFF MAY BE EMT.

KEYED NOTES

1. CHARGER TO BE INSTALLED IN SEPARATE CONTRACT.

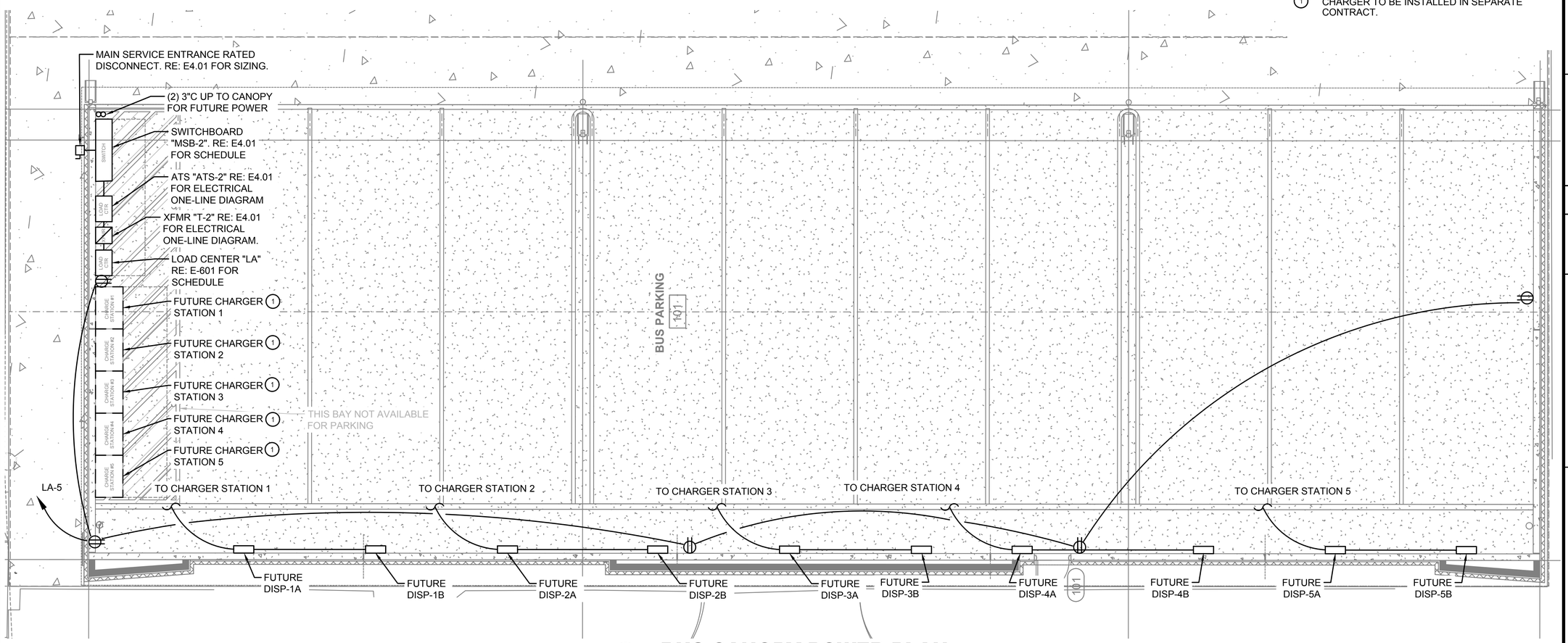

1 / E-201 **BUS CANOPY POWER PLAN**

SCALE: 1/2" = 1'-0"

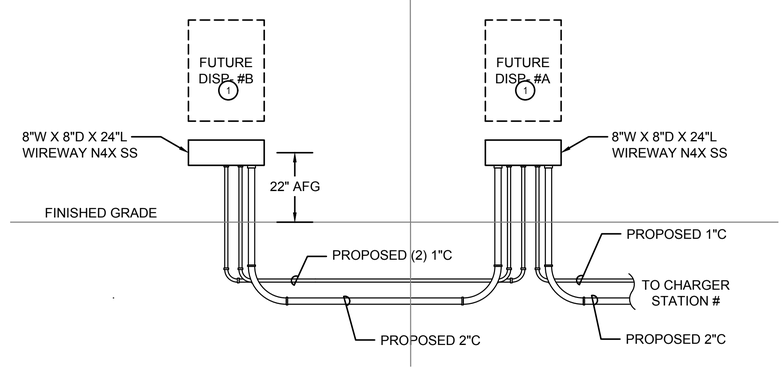

2 / E-201 **TYPICAL DISPENSER ELEVATION DETAIL**

SCALE: N.T.S.

NORTH

0 2.5 5 10
HORIZ SCALE IN FEET

City of Port Arthur Texas

TBPE FIRM #22626

Ferguson Consulting
Aviation Specialists for Electrical, Telecommunications and Security Systems
Ferguson Consulting Inc.
10200 Grogans Mill Rd. Ste. #420
The Woodlands, TX 77380
(281) 252-9232 Firm No. 6864

NO.	DATE	REVISION

GENERAL NOTES:

STATE OF TEXAS
C. LECETTE FERGUSON
81460
REGISTERED PROFESSIONAL ENGINEER
F-6864
12/10/25

DATE: DEC 2025

PROJECT TITLE:

PORT ARTHUR TRANSIT PARKING LOT

DRAWING TITLE:
BUS CANOPY POWER PLAN

DRAWING NUMBER: E2.02

SHEET NUMBER: 53 SHEET TOTAL: 59

SCALE: 1" = 5'-0"

DRAWN BY: RCF CHECKED BY: LF

GENERAL NOTES

1. REFER TO SHEET E0.01 FOR ADDITIONAL NOTES, LEGENDS, AND SYMBOLS.
2. ALL CONDUIT BELOW 6' AFF TO BE RGS. ALL CONDUIT ISTALLED ABOVE 6' AFF MAY BE EMT.

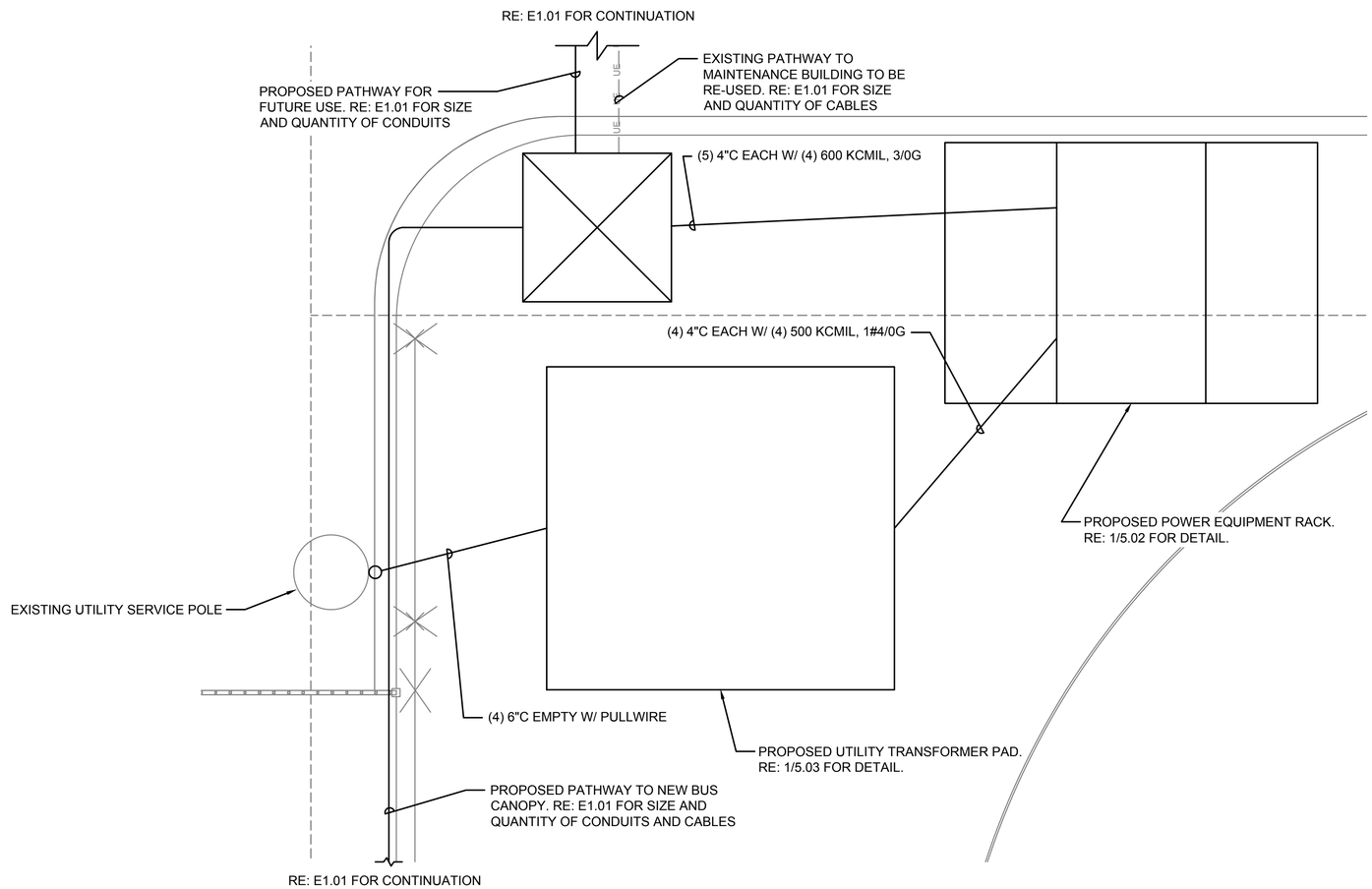

1 / E-301

ENLARGED POWER PLAN

SCALE: 1/2" = 1'-0"

NORTH

0 1 2 4

HORIZ SCALE IN FEET

City of Port Arthur Texas

TBPE FIRM #22626

Ferguson Consulting
Aviation Specialists for Electrical, Telecommunications and Security Systems
Ferguson Consulting Inc.
10200 Grogans Mill Rd. Ste. #420
The Woodlands, TX 77380
(281) 252-9232 Firm No. 6864

NO.	DATE	REVISION

GENERAL NOTES:

STATE OF TEXAS
C. LECETTE FERGUSON
81460
REGISTERED PROFESSIONAL ENGINEER
F-6864
12/10/25

DATE: DEC 2025

PROJECT TITLE:

PORT ARTHUR TRANSIT PARKING LOT

DRAWING TITLE:
ENLARGED POWER PLAN

DRAWING NUMBER:
E3.01

SHEET NUMBER: 54
SHEET TOTAL: 59

SCALE: 1/2" = 1'-0"

DRAWN BY: RCF
CHECKED BY: LF

GENERAL NOTES

1. COORDINATE WITH ELECTRIC UTILITY COMPANY TO PROVIDE NEW ELECTRICAL SERVICE. PROVIDE ALL REQUIREMENTS NECESSARY FOR NEW ELECTRIC SERVICE.
2. DEVICES IN MAIN SWITCHBOARD, "MSB", MUST BE FULLY RATED TO ACCOMMODATE THE AVAILABLE FAULT CURRENT.
3. PROVIDE A PERMANENTLY AFFIXED LABEL ON THE MAIN SWITCHBOARD, "MSB", INDICATING THE AVAILABLE FAULT CURRENT AT THE TIME OF INSTALLATION AND CALCULATION. THE LABEL WILL BE 2"x3" IN SIZE WITH BLUE LETTERING ON CONTRASTING BACKGROUND AND ALSO INDICATE THE DATE OF CALCULATION.
4. ALL UNDERGROUND CONDUITS SHALL BE SCHEDULE 40 PVC UON. ALL ABOVE GROUND CONDUITS SHALL BE RGS.

UTILITY LOAD ANALYSIS

LOAD DESCRIPTION	CONNECTED LOAD KVA	DEMAND LOAD KVA
LIGHTING @ 125%	1.36	1.7
RECEPTACLES @ 100%	0.96	0.96
EQUIPMENT @ 100% (FUTURE)	850	850
SUB-TOTAL LOAD	852.32	852.66

852.66 KVA / 831V = 1024A @ 480V
800A SERVICE EXCEEDS NEC REQUIREMENTS

PANEL: LA

VOLTAGE: 120/208V | 3 * 4 W | AIC: 10,000 | REMARKS:
MAINS: 40 AMPS | ☐ MLO ☒ MCB | ☒ SURFACE ☐ FLUSH
LUGS: ☐ SUB - FEED ☐ FEED - THRU | ☐ NEMA 1 ☒ NEMA 3R

C"	WIRE	LOAD DESCRIPTION	KVA	BKR.	CKT	CKT	BKR.	KVA	LOAD DESCRIPTION	WIRE	C"
		CANOPY LIGHT CKT 1	.77	20	1	2	20		SPARE		
		CANOPY LIGHT CKT 2	.39	20	3	4	20	.20	CANOPY EXTERIOR LIGHTING		
		RECEPTACLES	.96	20	5	6	20		SPARE		
		SPACE			7	8			SPACE		
					9	10					
					11	12					
					13	14					
					15	16					
					17	18					
					19	20					
					21	22					
					23	24					

	PHASE A	PHASE B	PHASE C
KVA CONNECTED LOAD	.77 KVA	.59 KVA	.96 KVA
KVA DEMAND	.96 KVA	.74 KVA	.96 KVA
AMPS DEMAND @ 208V	2.66 A	2.05 A	2.66 A

* ALL BRANCH CIRCUITS ARE 2 #12, 1 #12G THWN CU IN 1"C (UON)

** EXTEND BRANCH CIRCUIT NOTED TO EQUIPMENT LOCATION IN ASSOCIATED EQUIPMENT RACK. PROVIDE RECEPTACLE OR HARDWIRE CONNECTION TO EQUIPMENT AS REQUIRED.

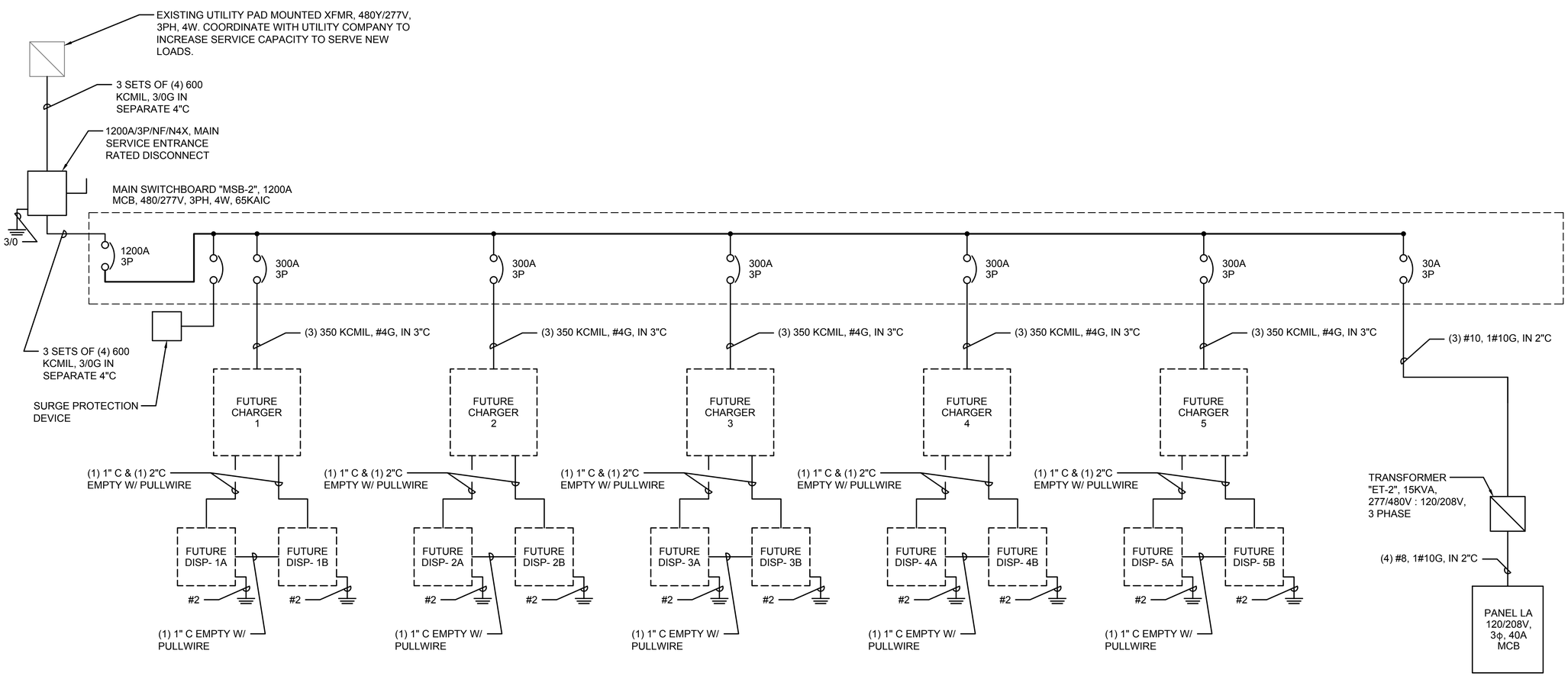

City of Port Arthur Texas

TBPE FIRM #22626

Ferguson Consulting
Aviation Specialists for Electrical, Telecommunications and Security Systems
Ferguson Consulting Inc.
10200 Grogans Mill Rd. Ste. #420
The Woodlands, TX 77380
(281) 252-9232 Firm No. 6864

NO.	DATE	REVISION

GENERAL NOTES:

STATE OF TEXAS
C. LECETTE FERGUSON
81460
REGISTERED PROFESSIONAL ENGINEER
F-6864
12/10/25

DATE: DEC 2025

PROJECT TITLE:
PORT ARTHUR TRANSIT PARKING LOT

DRAWING TITLE:
ELECTRICAL ONE-LINE DIAGRAM

DRAWING NUMBER: E4.01

SHEET NUMBER: 55 | SHEET TOTAL: 59

SCALE: NONE

DRAWN BY: RCF | CHECKED BY: LF

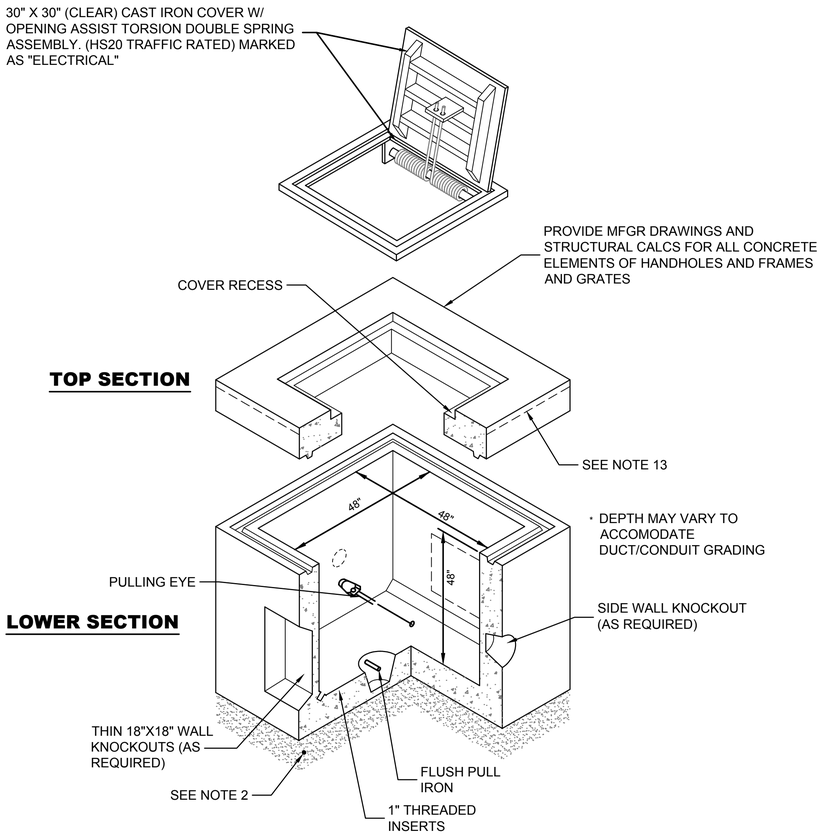

1 / E5.01

4' X 4' X 4' HANDHOLE DETAIL

SCALE: N.T.S.

HANDHOLE NOTES

1. ALL MANHOLE/HANDHOLE STRUCTURES TO BE CAST IN PLACE OR PRECAST.
2. ALL STRUCTURES MUST BE PLACED ON A MINIMUM OF 6" CRUSHED AGGREGATE BASE.
3. CONCRETE MUST BE IN ACCORDANCE WITH ITEM P-610.
4. STEEL MUST CONFORM TO ASTM 615 - GRADE 60. ALL STEEL OTHER THAN REBAR TO BE HOT DIPPED GALVANIZED AFTER FABRICATION.
5. EACH STRUCTURE MUST HAVE A 3/4" X 10' COPPER-CLAD STEEL GROUND ROD INSTALLED IN ONE CORNER OF THE FLOOR 1' FROM THE ADJACENT STRUCTURE WALLS.
6. A MINIMUM OF 4 - 4" SLEEVES MUST BE PLACED IN EACH WALL OF MANHOLE/HANDHOLE RECEIVING DUCTBANKS. A 2'X2' KNOCK-OUT MUST BE PROVIDED IN EACH WALL OF THE MANHOLE OR HANDHOLE NOT RECEIVING DUCTBANKS IN THIS PROJECT FOR FUTURE ACCESS.
7. PULLING IRONS MUST BE PLACED IN EACH WALL OPPOSITE DUCT BANKS.
8. THE CONTRACTOR MUST COORDINATE THE EXACT LOCATION OF EACH STRUCTURE WITH THE EL500 SERIES DRAWINGS AND SCHEDULE.
9. INSTALL ONE 3/4" PVC SLEEVES OVER EACH DUCT BANK FOR COUNTERPOISE.
10. PROVIDE 36"L #6 AWG BRAIDED GROUND STRAP EXOTHERMICALLY WELDED TO GROUND ROD FOR GROUNDING OF ALL METALLIC PARTS OF THE MANHOLE/HANDHOLE. ALL GROUNDING AND TERMINATION METHODS MUST BE SUBMITTED TO THE ENGINEER FOR REVIEW AND APPROVAL. CONDUCTOR TERMINATION COMPOUND MUST BE USED ON ALL MECHANICAL CONNECTIONS.
11. ALL MANHOLES/HANDHOLES MUST BE PROVIDED WITH CABLE RACKS PULLING IRONS. ALL MANHOLES 5' DEEP OR GREATER MUST BE PROVIDED WITH LADDERS.
12. THE CONTRACTOR MUST SUBMIT SHOP DRAWINGS SHOWING ALL REINFORCING STEEL AND OTHER CONSTRUCTION DETAILS PRIOR TO FABRICATION.
13. THE TOP OF THE MANHOLES/HANDHOLES MUST BE 1" MIN. (+1" TOL) ABOVE THE FINISHED GRADE INCLUDING THE SOD OR TURF, EXCEPT WHEN INSTALLED IN PAVEMENT.
14. ALL HANDHOLE COVERS MUST HAVE SURFACE LETTERING AS NOTED.
15. AT LOCATIONS WHERE DUCT ENTERS MANHOLES IN THIS PROJECT, THE TERMINATORS MUST BE CAST INTO THE MANHOLE WALLS. ALL CONDUIT OPENINGS TO BE GROUTED.
16. ALL LADDERS MUST BE CONSTRUCTED TO COMPLY WITH MOST RECENT OSHA REGULATIONS.
17. INSTALL HANDHOLES AND MANHOLES PARALLEL TO ADJACENT PAVEMENT. HANDHOLE DEPTHS MUST BE 48" NOMINAL DEPTH, EXCEPT ADJACENT TO PAVEMENT CROSSINGS WHERE EXTRA DEEP HANDHOLES MAY BE REQUIRED TO CLEAR UNDERDRAINS, ELECTRICAL CONDUITS, OR OTHER POTENTIAL ITEMS OF INTERFERENCE.
18. PROVIDE (2) SADDLE RACKS FOR EACH MANHOLE / HANDHOLE SIDE, MANUFACTURED BY UNDERGROUND DEVICES, INC. MODEL NO. 2SR3N OR APPROVED EQUAL. INSTALL PER MANUFACTURER RECOMMENDATION.

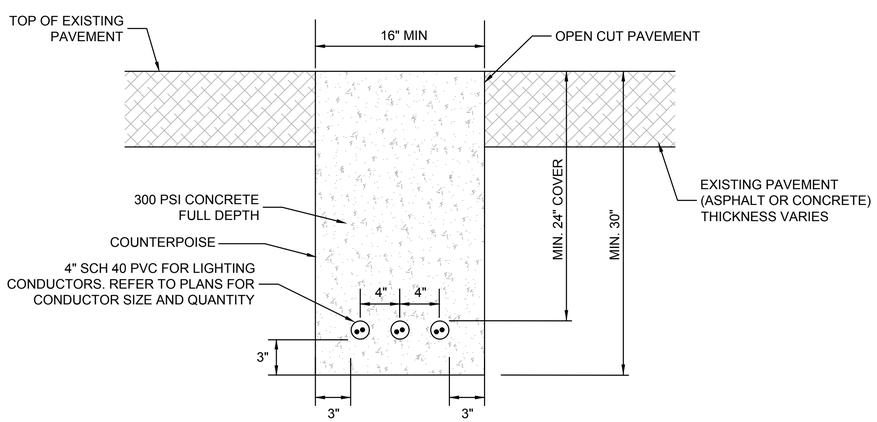

2 / E5.01

OPEN-CUT EXISTING PAVEMENT, 3 WAY, 4"C

SCALE: N.T.S.

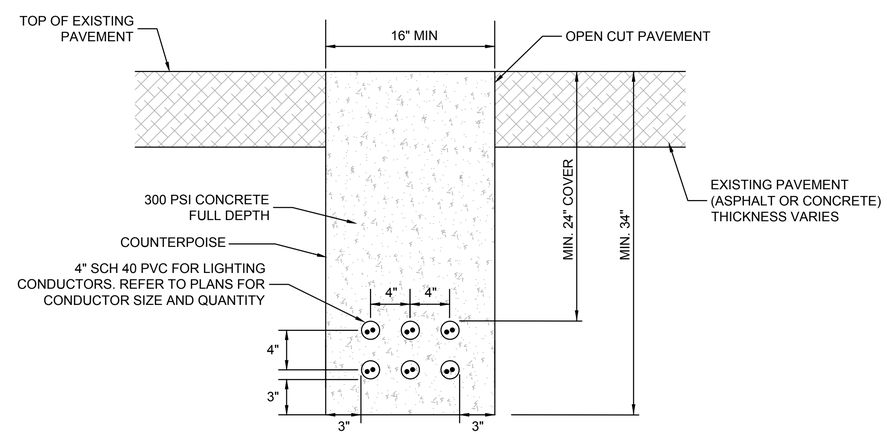

3 / E5.01

OPEN-CUT EXISTING PAVEMENT, 6 WAY, 4"C

SCALE: N.T.S.

City of Port Arthur Texas

TBPE FIRM #22626

Ferguson Consulting
Aviation Specialists for Electrical, Telecommunications and Security Systems
Ferguson Consulting Inc.
10200 Grogans Mill Rd. Ste. #420
The Woodlands, TX 77380
(281) 252-9232 Firm No. 6864

NO.	DATE	REVISION

GENERAL NOTES:

STATE OF TEXAS
C. LECETTE FERGUSON
81460
REGISTERED PROFESSIONAL ENGINEER
F-6864
12/10/25

DATE: DEC 2025

PROJECT TITLE:
PORT ARTHUR TRANSIT PARKING LOT

DRAWING TITLE:
ELECTRICAL HANDHOLE & DUCTBANK DETAILS

DRAWING NUMBER: E5.01

SHEET NUMBER: 56 SHEET TOTAL: 59

SCALE: NONE

DRAWN BY: RCF CHECKED BY: LF

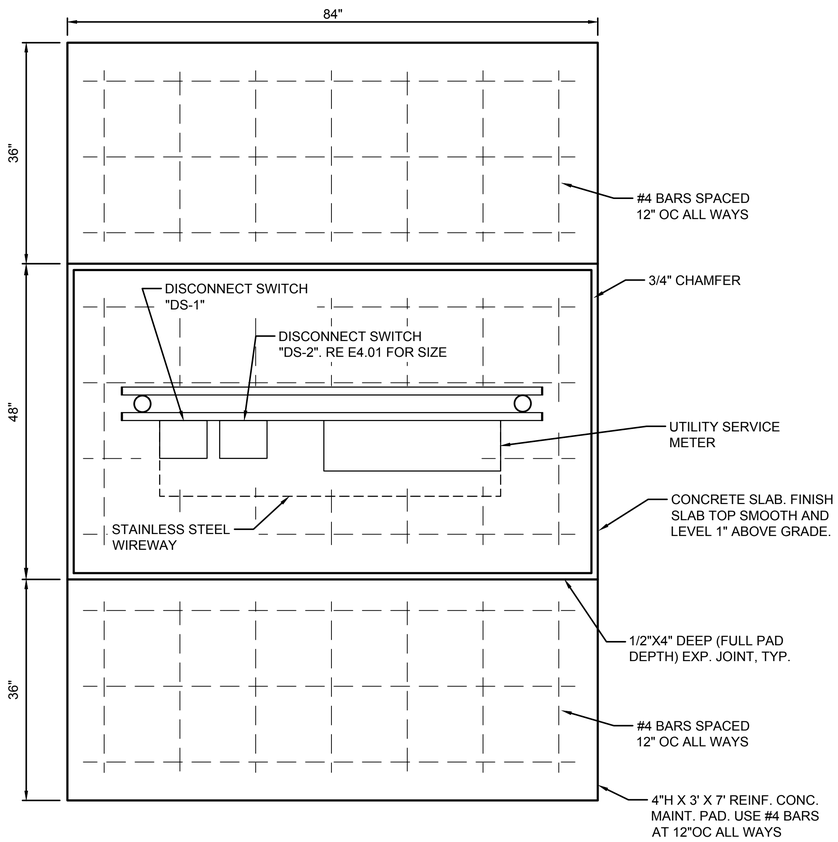

PLAN VIEW

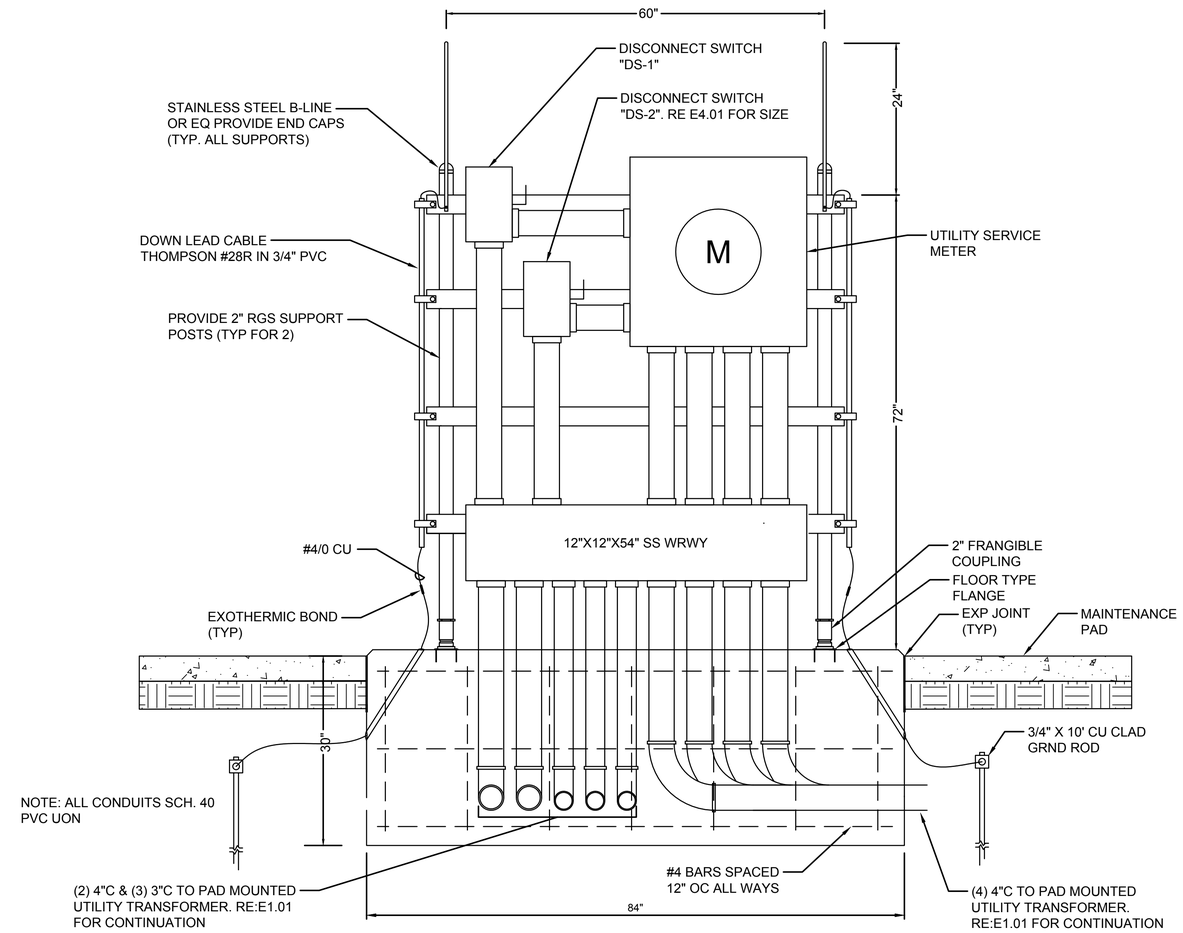

FRONT ELEVATION

1
E5.02

POWER EQUIPMENT RACK DETAIL

SCALE: N.T.S.

City of Port Arthur Texas

TBPE FIRM #22626

Ferguson Consulting
Aviation Specialists for Electrical, Telecommunications and Security Systems
Ferguson Consulting Inc.
10200 Grogans Mill Rd. Ste. #420
The Woodlands, TX 77380
(281) 252-9232 Firm No. 6864

NO.	DATE	REVISION

GENERAL NOTES:

STATE OF TEXAS
C. LECETTE FERGUSON
81460
REGISTERED PROFESSIONAL ENGINEER
F-6864
12/10/25

DATE: DEC 2025

PROJECT TITLE:
PORT ARTHUR TRANSIT PARKING LOT

DRAWING TITLE:
POWER EQUIPMENT RACK DETAILS

DRAWING NUMBER:
E5.02

SHEET NUMBER: 57
SHEET TOTAL: 59

SCALE: NONE

DRAWN BY: RCF
CHECKED BY: LF

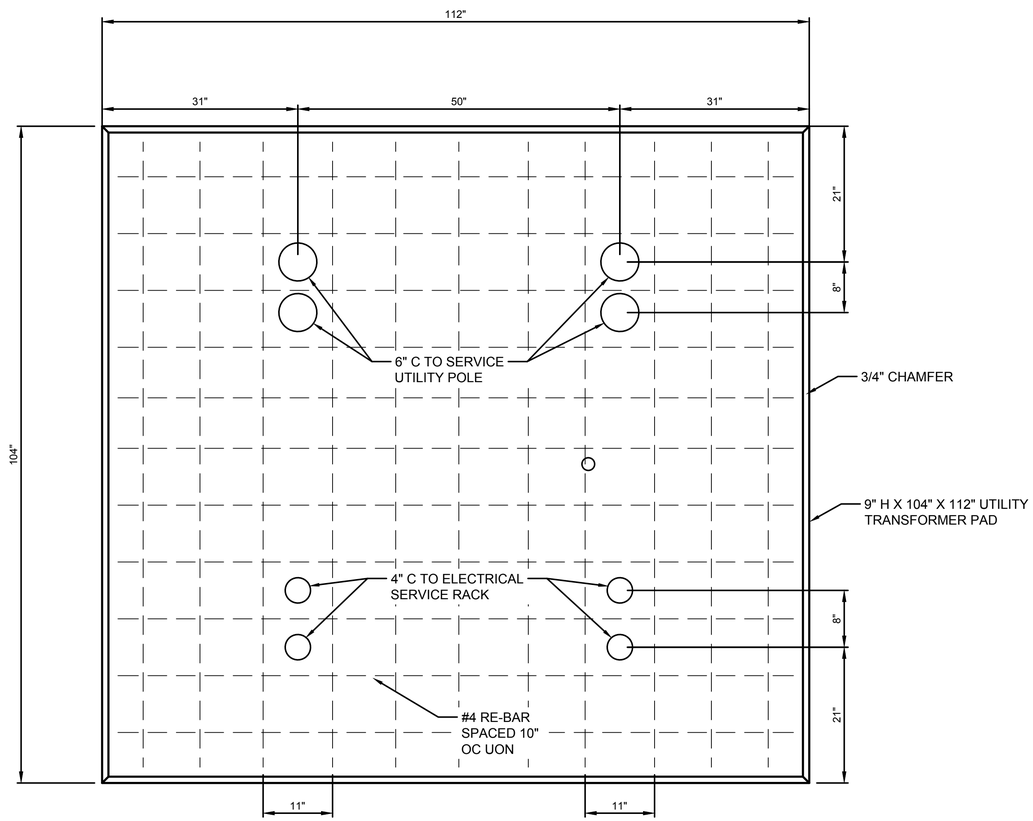

1
E5.03

UTILITY TRANSFORMER PAD LAYOUT

SCALE: N.T.S.

City of Port Arthur Texas

TBPE FIRM #22626

Ferguson Consulting
Aviation Specialists for Electrical, Telecommunications and Security Systems

Ferguson Consulting Inc.
10200 Grogans Mill Rd. Ste. #420
The Woodlands, TX 77380
(281) 252-9232 Firm No. 6864

NO.	DATE	REVISION

GENERAL NOTES:

STATE OF TEXAS
C. LECETTE FERGUSON
81460
REGISTERED PROFESSIONAL ENGINEER
F-6864
12/10/25

DATE: DEC 2025

PROJECT TITLE:

PORT ARTHUR TRANSIT PARKING LOT

DRAWING TITLE:
UTILITY TRANSFORMER PAD LAYOUT

DRAWING NUMBER:
E5.03

SHEET NUMBER: 58
SHEET TOTAL: 59

SCALE: NONE

DRAWN BY: RCF
CHECKED BY: LF

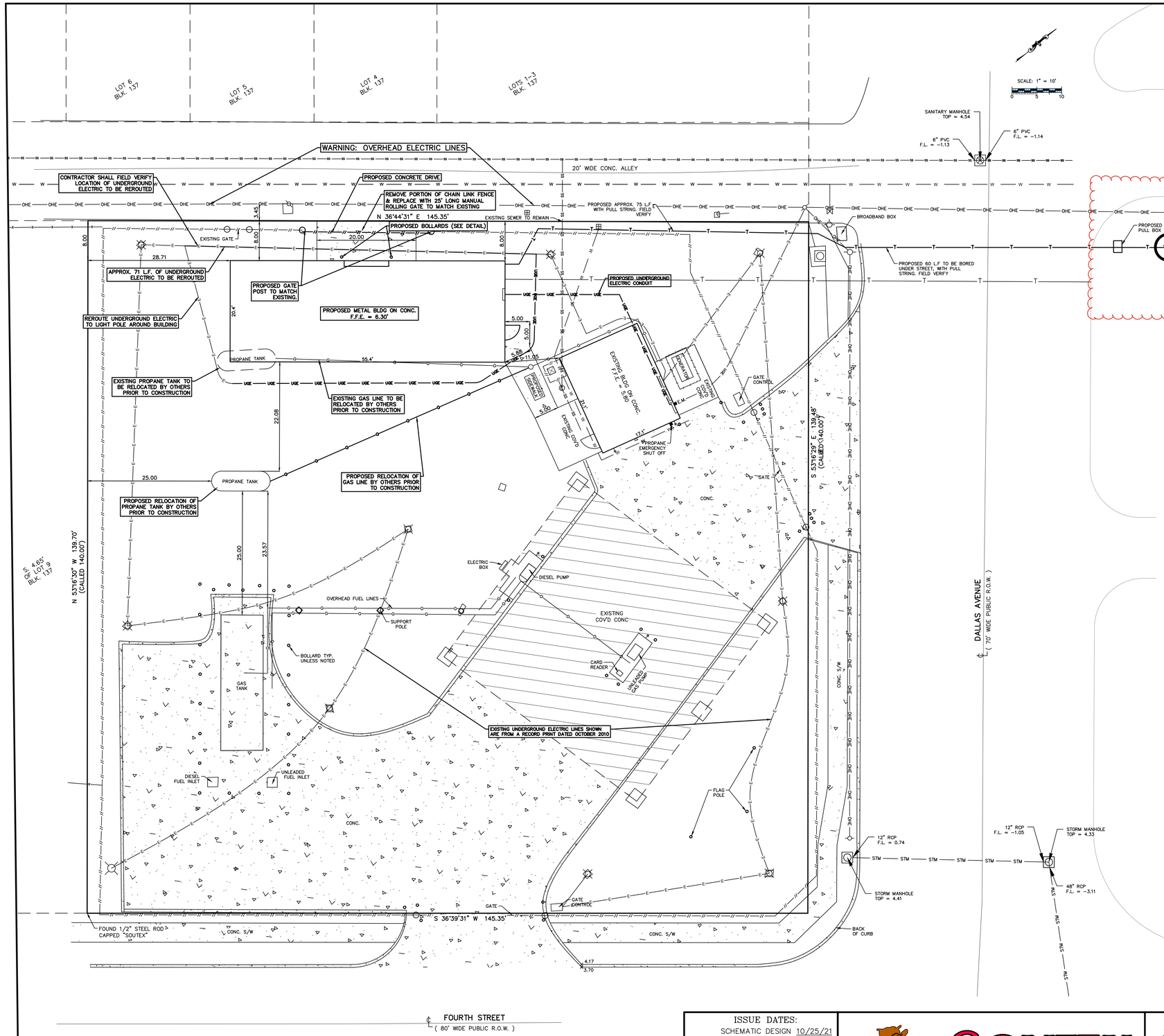

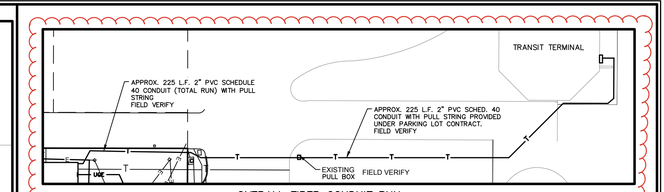

OVERALL FIBER CONDUIT RUN

NOTES:

1. EXCESS EXCAVATED SOIL WILL BE HAULED AWAY BY CITY OF PORT ARTHUR. CONTRACTOR SHALL COORDINATE WITH OWNER.
2. CONTRACTOR SHALL FIELD LOCATE ALL UNDERGROUND UTILITIES PRIOR TO CONSTRUCTION.
3. CONTRACTOR SHALL SOD DISTURBED AREAS TO REESTABLISH VEGETATION AFTER CONSTRUCTION IS COMPLETE.

SCOPE FOR FIBER CONDUIT RUN:

1. SEE ABOVE BOX TITLED "OVERALL CONDUIT RUN"
2. CONSTRUCTION START AT PROPOSED PULL BOX AT THE INTERSECTION OF DALLAS AVENUE AND ALLEY
3. PULL BOX HAS BEEN PLACED FROM PRIOR PROJECT. CONTRACTOR MUST FIELD VERIFY LOCATION
4. PROVIDE APPROXIMATELY 225 LF 2" PVC SCHEDULE 40 CONDUIT WITH PULL STRING TO TRANSIT TERMINAL AS SHOWN

LEGEND

- PROPOSED CONDUIT FOR COMMUNICATIONS
- UNDERGROUND GAS
- EXISTING OVERHEAD ELECTRIC
- EXISTING UNDERGROUND ELECTRIC
- PROPOSED U.G. ELECTRIC
- EXISTING SANITARY SEWER
- EXISTING WATER LINE
- EXISTING 4' CHAINLINK FENCE
- EXISTING STORM SEWER
- = STORM SEWER MANHOLE
- = SANITARY SEWER MANHOLE
- = WATER VALVE
- = WATER METER
- = FIRE HYDRANT
- = CLEANOUT
- = GUY ANCHOR
- = POWER POLE
- = LIGHT POLE
- = WATER SPIGOT
- E.M. = ELECTRICAL METER

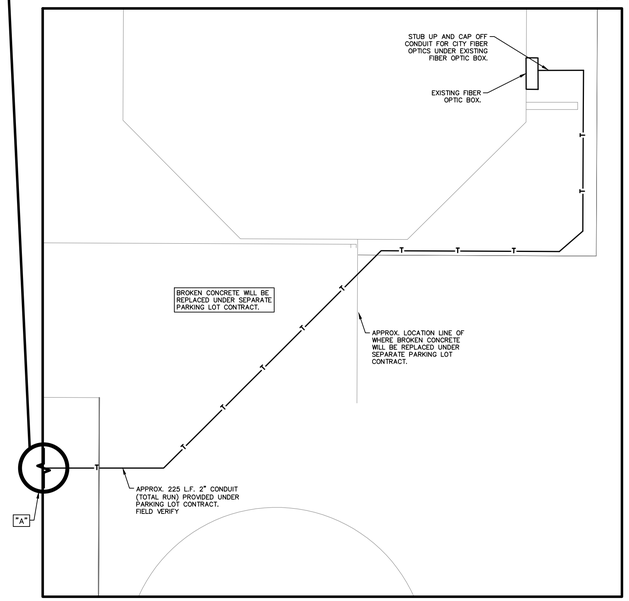

INTERIM REVIEW ONLY

Engineer: JEREMY J. MITCHELL
P.E. Serial No. 116941

Date: 12/29/21

ISSUE DATES:

SCHEMATIC DESIGN	10/25/21
S. DESIGN SCOPE CHANGE	11/05/21
DESIGN DEVELOPMENT	12/06/21
CONSTRUCTION DOCUMENTS	12/29/21
REVISIONS	X

FOR OWNERS REVIEW

SOUTEX SURVEYORS & ENGINEERS
T.B.P.E. FIRM #5755 • T.X.L.S. FIRM #10123800

3737 Doctors Drive
Port Arthur, Texas 77642
Tel. 409.983.2004
Fax. 409.983.2005
soutexsurveyors.com

©RIGHTS RESERVED

SHEET TITLE

SITE & UTILITY PLAN

PROJECT

CITY OF PORT ARTHUR, TRANSIT FUELING STATION
325 DALLAS AVE.
PORT ARTHUR, TEXAS 77640

PROJ. NO: 21-0632
SCALE: 1" = 10'
PRINT DATE: 12/29/21
DRAWN BY: DNS
CHECKED BY: SGN
APPROVED BY: SGN
SHEET C1.00

\\psuhex\SouteXserver\Data\1_SouteXProjects\2021\21-0632 COPA Transit Storage Bld Eng\DWG\21-0632 Civil - New Bldg.dwg May 20, 2022-8:41am BRIC, SR