NORTHERN VIRGINIA COMMUNITY COLLEGE

AN CA RENOVATE TESTING & WORKFORCE OFFICE

8333 LITTLE RIVER TURNPIKE
ANNANDALE, VIRGINIA

FOR VIRGINIA COMMUNITY COLLEGE SYSTEM (VCCS)
DEB PROJECT CODE: 260-B5260-054
VCCS PROJECT CODE: L24NV599
ISSUE FOR BID DOCUMENTS

PROJECT DESCRIPTION

THE SCOPE OF WORK INCLUDES RECONFIGURATION OF INTERIOR SPACES TO CREATE FIVE (5) PRIVATE OFFICES AND AN OPEN OFFICE AREA. NEW FINISHES WILL BE PROVIDED IN THE IMPACTED AREA. THE WORK ALSO INCLUDES MODIFICATIONS TO THE MECHANICAL, ELECTRICAL, AND SPRINKLER SYSTEMS ASSOCIATED WITH THE WORK AREA. THERE IS NO PLUMBING WORK.

BUILDING CODE INFORMATION

APPLICABLE CODES AND STANDARDS FOR NEW WORK:
VIRGINIA EXISTING BUILDING CODE (VEBC) - 2021 - ALTERATION LEVEL 2
VIRGINIA CONSTRUCTION CODE (VCC) - 2021
INTERNATIONAL FIRE CODE (IFC) - 2021
ADA90-TITLE II: 2010 ASAD CHAPTER 2 FOR SCOPING, ICC A117.1-2017 CHAPTERS 1 AND 3 THRU 11 FOR TECHNICAL REQUIREMENTS
VIRGINIA MECHANICAL CODE - 2021
NATIONAL ELECTRIC CODE - 2020
VIRGINIA CONSTRUCTION & PROFESSIONAL SERVICES MANUAL (CPSM) 2025 EDITION, REV 0, ISSUED 03/17/2025

USE GROUP:	B (BUSINESS), A-3 (ASSEMBLY), M (MERCANTILE), NONSEPARATED
BUILDING SF:	89,945 GSF
WORK AREA:	1,027 SF
BUILT	2011
BUILDING HEIGHT:	3 STORY ABOVE GRADE
CONSTRUCTION TYPE:	II A (BUILDING)
SPRINKLER SYSTEM:	FULLY SPRINKLERED

BUILDING CODE INFORMATION IS BASED ON RECORD DRAWINGS DATED 26TH MARCH 2010

ASBESTOS DISCLOSURE STATEMENT

AN ASBESTOS INSPECTION WAS NOT PERFORMED BECAUSE ALL PORTIONS OF THE EXISTING BUILDING THAT MAY BE AFFECTED BY THE WORK WERE ORIGINALLY CONSTRUCTED AFTER JANUARY 1, 1985.

LEAD PAINT DISCLOSURE STATEMENT

AN INSPECTION TO IDENTIFY LEAD CONTAINING OR COATED BUILDING COMPONENTS HAS NOT BEEN CONDUCTED BECAUSE THE BUILDING WAS CONSTRUCTED AFTER JANUARY 1, 1985 AND THE OWNER HAS NO KNOWLEDGE OF LEAD CONTAINING OR COATED BUILDING COMPONENTS IN THE BUILDING. IT IS THE CONTRACTOR'S RESPONSIBILITY TO COMPLY WITH ALL VIRGINIA OCCUPATIONAL SAFETY AND HEALTH (VOSH) REGULATIONS AS THEY PERTAIN TO EMPLOYEE EXPOSURES TO LEAD. **ALL LEAD AND LEAD-COATED BUILDING COMPONENTS SHALL BE RECYCLED TO THE EXTENT POSSIBLE.**

HIGH PERFORMANCE BUILDINGS ACT COMPLIANCE STATEMENT

IN ACCORD WITH THE HIGH PERFORMANCE BUILDINGS ACT, THE BUILDING IS EXEMPT FROM COMPLIANCE BECAUSE THE RENOVATED BUILDING AREA IS NOT GREATER THAN 5,000 GROSS SQUARE FEET.

VIRGINIA ENERGY CONSERVATION CODE COMPLIANCE STATEMENT

IN ACCORD WITH THE VIRGINIA ENERGY CONSERVATION CODE (VECC), THE BUILDING SHALL COMPLY WITH VECC SECTIONS C402 THROUGH C405 AND C408.

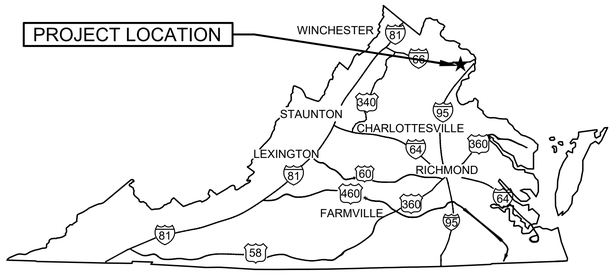

PLAN NORTH

LOCATION MAP
SCALE: NONE

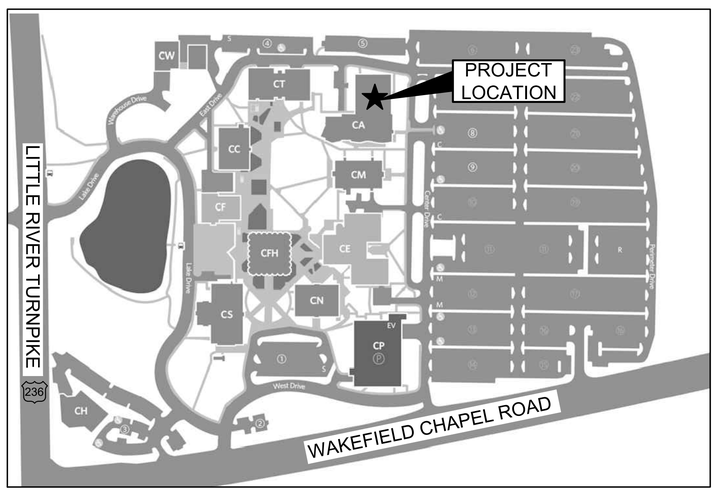

PLAN NORTH

VICINITY MAP
SCALE: NONE

GENERAL INFORMATION

OWNER:
COMMONWEALTH OF VIRGINIA, VIRGINIA COMMUNITY COLLEGE SYSTEM

AGENCY REPRESENTATIVE:
FORREST NICHOLS
CAPITAL OUTLAY PROGRAM MANAGER
FACILITY MANAGEMENT SERVICES
VIRGINIA COMMUNITY COLLEGE SYSTEM
300 ARBORETUM PLACE, SUITE 200
RICHMOND, VA 23236
PHONE: 804-819-4688
EMAIL: fnichols@nvcc.edu

ARCHITECT
AUSTIN BROCKENBROUGH & ASSOCIATES, LLC
ATTN: SE JIN KWAK
1011 BOULDER SPRINGS DRIVE, SUITE 200
RICHMOND, VIRGINIA 23225
PHONE: 804-592-3909
EMAIL: sejin.kwak@stratusteam.com

GENERAL NOTES

A. FIRE ALARM AND SPRINKLER SYSTEMS MUST REMAIN OPERATION DURING CONSTRUCTION. GENERAL CONTRACTOR MUST NOTIFY FIRE DEPARTMENT PRIOR TO PERFORMING WORK ON THE FIRE ALARM AND SPRINKLER SYSTEMS OR TAKING SYSTEMS OFFLINE AND ENSURE NECESSARY PRECAUTIONS ARE MET.

B. GENERAL CONTRACTOR TO NOTIFY THE OWNER THREE DAYS IN ADVANCE OF ANY IMPAIRMENTS TO THE FIRE ALARM AND SPRINKLER SYSTEMS. GENERAL CONTRACTOR SHALL PLAN WORK TO MINIMIZE IMPAIRMENTS.

C. GENERAL CONTRACTOR MUST PROVIDE FIRE WATCH FOR ANY IMPAIRMENT LONGER THAN 1-HOUR. THE FIRE WATCH TO INCLUDE WALKING THE OVERALL BUILDING, NOT JUST THE AREA OF WORK.

D. GENERAL CONTRACTOR MUST MAINTAIN A FIRE WATCH LOG AND SHARE IT WITH THE OWNER'S PROJECT MANAGER AS THE PROJECT ADVANCES THROUGH TO COMPLETION.

E. A PRE-INSTALLATION MEETING FOR LOCK CYLINDER KEYING SHALL BE HELD BEFORE START OF CONSTRUCTION. IT SHALL BE ATTENDED BY THE BUILDING USERS, GENERAL CONTRACTOR, NVCC DOOR HARDWARE CONTRACTOR, AND NVCC PROJECT MANAGER.

F. SUPPORTS FOR BUILDING COMPONENTS THAT ARE SUSPENDED FROM FLOOR OR CEILING JOISTS MUST BE ATTACHED FROM THE TOP CHORD OF THE JOIST.

G. PROVIDE SIGNAGE AT EACH ROOM FOLLOWING THE NORTHERN VIRGINIA COMMUNITY COLLEGE STANDARD (APPENDIX B OF PROJECT MANUAL). ALL SIGNAGE SHALL BE NOVA GREEN COLOR.

H. WHERE CEILINGS ARE REMOVED DURING CONSTRUCTION, SPRINKLERS SHALL BE CHANGED TO UPRIGHT HEADS AND EXTENDED TO WITHIN 12 INCHES OF THE UNDERSIDE OF THE FLOOR ABOVE.

INDEX OF DRAWINGS

SHEET	SHEET NUMBER	SHEET TITLE
GENERAL		
1	G-001	COVER SHEET
2	G-002	LIFE SAFETY PLAN AND CODE INFORMATION
ARCHITECTURAL		
3	A-001	ABBREVIATIONS, LEGENDS AND NOTES
4	AD101	FIRST FLOOR DEMO PLANS
5	A-101	FIRST FLOOR NEW WORK PLANS
6	A-501	DETAILS
MECHANICAL		
7	M-001	LEGEND, NOTES AND SCHEDULES
8	M-002	DETAILS
9	M-101	FIRST FLOOR MECHANICAL PLANS - DEMO AND NEW WORK
ELECTRICAL		
10	E-001	ELECTRICAL ABBREVIATIONS, LEGEND, NOTES
11	E-101	FIRST FLOOR ELECTRICAL PLANS
12	E-601	SCHEDULES

CLIENT	NVCC
JOB NO.	25-0296
DATE	05/15/2026
SCALE	AS NOTED
DRAWN	LJF
DESIGN	SJK
APPROVED	KDS
Q.C. REVIEW	SJK

NO.	REVISIONS	DATE

BROCKENBROUGH
A Stratus Team Company
1011 Boulder Springs Drive, Suite 200 | Richmond, VA 23225
804.592.3900 *main* | 804.592.3901 *fax*
www.brockenbrough.com

COVER SHEET
AN CA RENOVATE TESTING & WORKFORCE OFFICE
DEB PROJECT CODE: 260-B5260-054
VCCS PROJECT CODE: L24NV599
ANNANDALE VIRGINIA

COMMONWEALTH OF VIRGINIA
SE JIN KWAK
Lic. No. 014889
05/15/2026
ARCHITECT

SHEET 1 OF 12

G-001

FILE NAME: P:\ABA\25 Jobs\25-0296 CA Renovate Testing & Workforce Office - Annandale Campus NVCC\CAD\G\COVER SHEET.dwg LAYOUT NAME: COVER SHEET PLOTTED: Thursday, May 14, 2026 - 11:09am USER: lkidkamp

CODE SUMMARY

BUILDING CODES:
2021 VIRGINIA CONSTRUCTION CODE (VCC)
2021 VIRGINIA EXISTING BUILDING CODE (VEBC)
2021 VIRGINIA ENERGY CONSERVATION CODE (VECC)
2021 VIRGINIA MECHANICAL CODE (VMC)
2020 NFPA 70, NATIONAL ELECTRICAL CODE
2021 VIRGINIA STATEWIDE FIRE PREVENTION CODE
ADA90 - TITLE II (2010 ASAD CHAPTER 2 FOR SCOPING, ICC A117.1-2017 CHAPTERS 1 AND 3 THROUGH 11 FOR TECHNICAL REQUIREMENTS)
CONSTRUCTION AND PROFESSIONAL SERVICES MANUAL, 2025 (CPSM), REV 0, ISSUED 03/17/2025
VIRGINIA COMMUNITY COLLEGE SYSTEM CPSM 2022 EDITION, REV 0, ISSUED 08/15/2022

USE GROUP: B - BUSINESS (PRIMARY)
A-3 - ASSEMBLY
M - MERCANTILE
NON-SEPARATED

CONSTRUCTION TYPE: IIA (NO CHANGE)

EXISTING BUILDING AREA: 89,544 GSF (NO CHANGE)

1ST FLOOR	41,354
2ND FLOOR	24,470
3RD FLOOR	23,720
TOTAL	89,544

EXISTING OCCUPANT LOAD:

1ST FLOOR	731
2ND FLOOR	528
3RD FLOOR	697
TOTAL	1,956

NEW OCCUPANT LOAD:

1ST FLOOR	704
2ND FLOOR	528
3RD FLOOR	697
TOTAL	1,928

NEW OCCUPANCY CALCULATION

NUM	NAME	SF	SF/OCC	OCC
115	FRONT DESK	-	-	-
115A	OFFICE	-	-	-
116A	OFFICE	89	150	1
116B	OFFICE	89	150	1
116C	OFFICE	132	150	1
116D	OFFICE	81	150	1
116E	OFFICE	89	150	1
116	LOBBY	513	150	4
TOTAL		993		9

EXISTING OCCUPANCY CALCULATION

NAME	SF	SF/OCC	OCC
FRONT DESK	-	-	-
OFFICE	-	-	-
TESTING CENTER	639	20	32
LOBBY	388	100	4
TOTAL	1,027		36

NOTE: EXISTING OCCUPANCY CALCULATIONS ARE BASED ON CALCULATIONS FROM EXISTING DRAWINGS BY EYP, DATED 03/26/2010.

CHANGE OF OCCUPANCY RESULTS IN A REDUCTION OF 27 OCCUPANTS FROM EXISTING CONDITIONS.

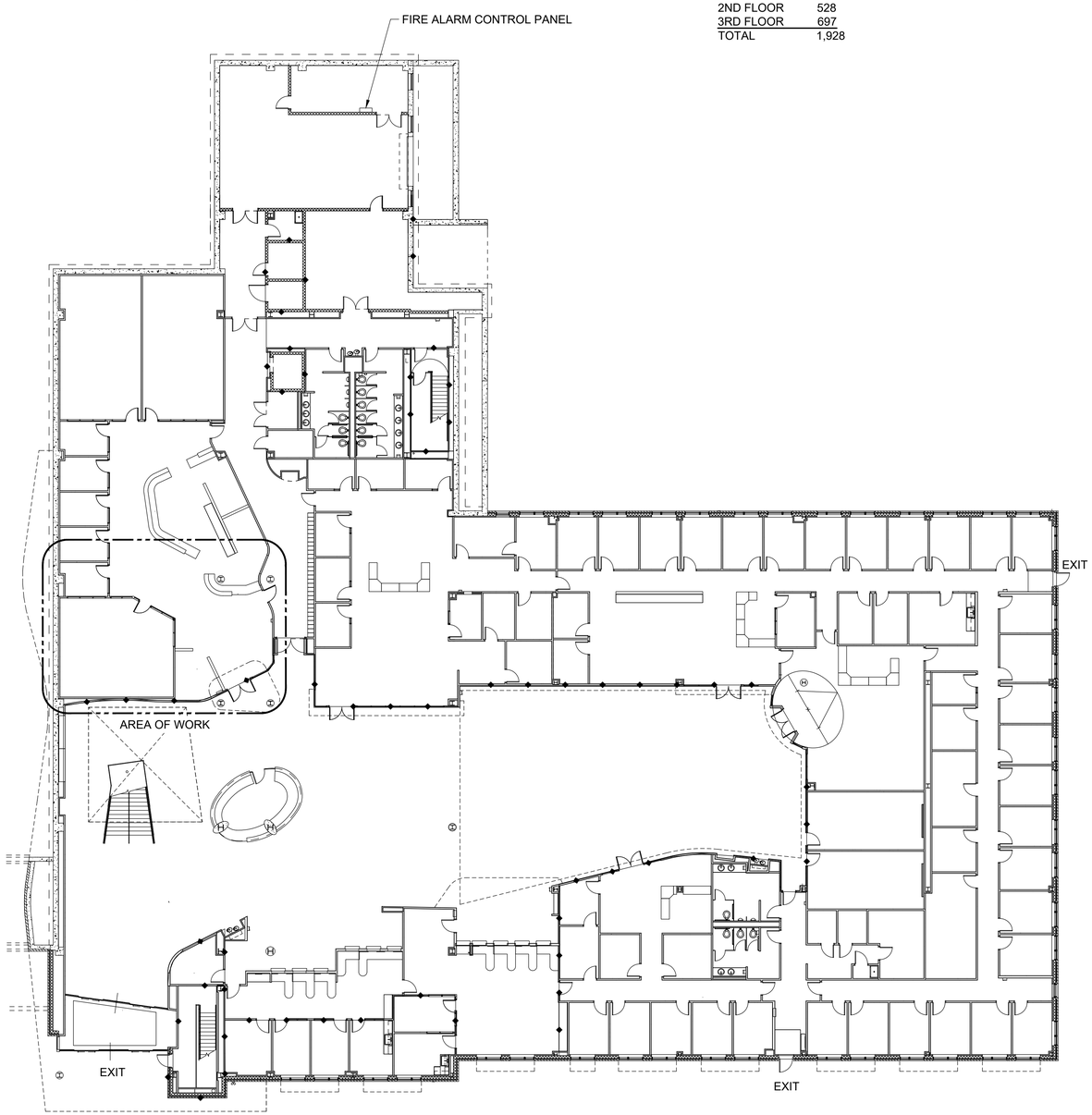

FIRST FLOOR PLAN
SCALE: 1/16" = 1'-0"

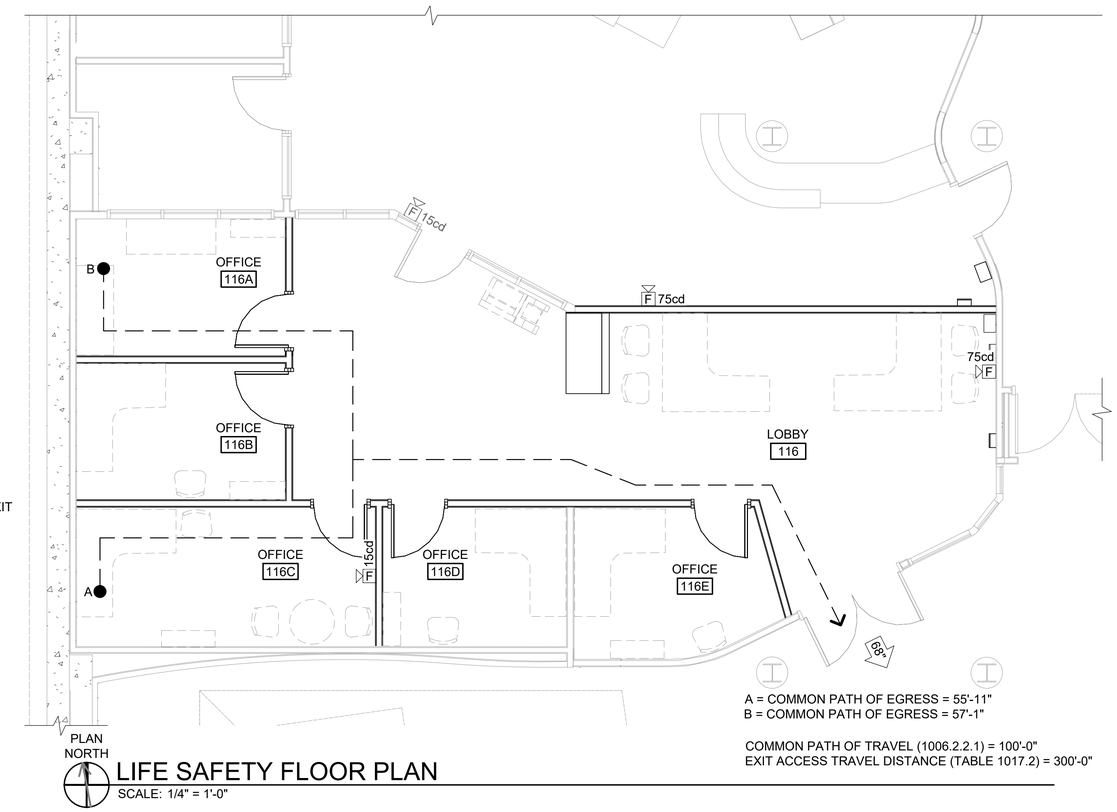

A = COMMON PATH OF EGRESS = 55'-11"
B = COMMON PATH OF EGRESS = 57'-1"

COMMON PATH OF TRAVEL (1006.2.2.1) = 100'-0"
EXIT ACCESS TRAVEL DISTANCE (TABLE 1017.2) = 300'-0"

LIFE SAFETY FLOOR PLAN
SCALE: 1/4" = 1'-0"

1/4"=1'-0" 0' 1' 4' 8' 12'

CLIENT NVCC
JOB NO. 25-0296
DATE 05/15/2026
SCALE AS NOTED
DRAWN LJF
DESIGN SJK
APPROVED KDS
Q.C. REVIEW SJK

NO.	REVISIONS	DATE

BROCKENBROUGH
A Stratus Team Company
1011 Boulder Springs Drive, Suite 200 | Richmond, VA 23225
804.592.3900 *main* | 804.592.3901 *fax*
www.brockenbrough.com

LIFE SAFETY PLAN AND CODE INFORMATION

AN CA RENOVATE TESTING & WORKFORCE OFFICE

DEB PROJECT CODE: 260-B5260-054
VCCS PROJECT CODE: L24NV599

ANNANDALE VIRGINIA

COMMONWEALTH OF VIRGINIA
SEAN KWAK
Lic. No. 014889
05/15/2026
ARCHITECT

SHEET 2 OF 12

G-002

FILE NAME: P:\ABA25 Jobs\25-0296 CA Renovate Testing & Workforce Office - Annandale Campus NVCC\CAD\LIFE SAFETY PLAN AND CODE INFORMATION.dwg LAYOUT NAME: LIFE SAFETY PLAN AND CODE INFORMATION PLOTTED: Thursday, May 14, 2026 - 11:09am USER: lleidkamp

DOOR SCHEDULE

NUMBER	FIRE RATING	DOOR			FRAME			HARDWARE SET	NUMBERED NOTES, REMARKS
		SIZE (W x H x D)	TYPE	MATERIAL	TYPE	MATERIAL	DETAILS HEAD		
116A.1	--	3'-0" x 7'-0" x 1-3/4"	F	WOOD	A	HM	B/A-001	1	--
116B.1	--	3'-0" x 7'-0" x 1-3/4"	F	WOOD	A	HM	B/A-001	1	--
116C.1	--	3'-0" x 7'-0" x 1-3/4"	F	WOOD	A	HM	B/A-001	1	--
116D.1	--	3'-0" x 7'-0" x 1-3/4"	F	WOOD	A	HM	B/A-001	1	--
116E.1	--	3'-0" x 7'-0" x 1-3/4"	F	WOOD	A	HM	B/A-001	1	--

GENERAL NOTES:

A. DOOR FRAMES TO BE PRIMED AND PAINTED. MATCH EXISTING COLOR.
B. WOOD DOORS TO BE PRE-FINISHED BY MANUFACTURER.

HARDWARE SET HW-1

QTY	DESCRIPTION	FINISH
(3)	HINGE	US32D
(1)	OFFICE LOCKSET	US26D
(1)	CYLINDER	
(3)	SILENCERS	
(1)	WALL STOP	

FINISH SCHEDULE

ROOM		FLOOR	BASE	WALLS		CEILING		NUMBERED NOTES, REMARKS
NUMBER	NAME			MATERIAL	FINISH	MATERIAL	FINISH	
115	FRONT DESK	ETR	RB	GWB	PNT-1	ACT	-	
116A	OFFICE	CPT	RB	GWB	PNT-1	ACT	-	
116B	OFFICE	CPT	RB	GWB	PNT-1	ACT	-	
116C	OFFICE	CPT	RB	GWB	PNT-1	ACT	-	
116D	OFFICE	CPT	RB	GWB	PNT-1	ACT	-	
116E	OFFICE	CPT	RB	GWB	PNT-1	ACT	-	
116	LOBBY	CPT	RB	GWB	PNT-1	ACT	-	

GENERAL NOTES:

1. PROVIDE ABUSE-RESISTANT GYPSUM BOARD AT ALL LOCATIONS.
2. ACOUSTICAL CEILING GRID AND TILES TO MATCH EXISTING.

PAINT COLOR (BASIS OF DESIGN LISTED):
PNT-1: SHERWIN WILLIAMS SW7631 (CITY LOFT)
PNT-2: SHERWIN WILLIAMS SW6381 (ANJOU PEAR)
TRIM: MATCH EXISTING

FINISH COLOR (BASIS OF DESIGN LISTED):
CPT- MOHAWK GT420 RISE UP, 968 DOUGLAS
RB - TARKETT 4" COVE BASE, COLOR 63 BURNT UMBER
SSM - CORIAN CALACATTA GREIGE

LEGEND:

ETR	EXISTING TO REMAIN
ACT	ACOUSTIC CEILING TILE
PNT	PAINT
GWB	GYPSUM WALL BOARD
CPT	CARPET TILE
RB	RESILIENT BASE
PLAM	PLASTIC LAMINATE
SSM	SOLID SURFACE MATERIAL

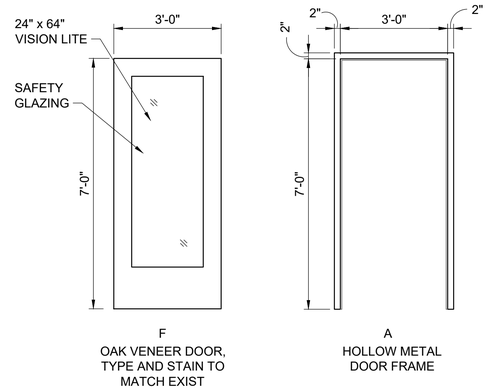

C
A-001 A-001 DOOR AND DOOR FRAME TYPES
SCALE: NONE

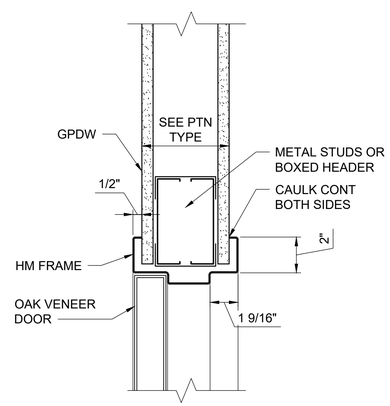

B
A-001 A-001 TYP DETAIL - DOOR HEAD
SCALE: 3" = 1'-0"

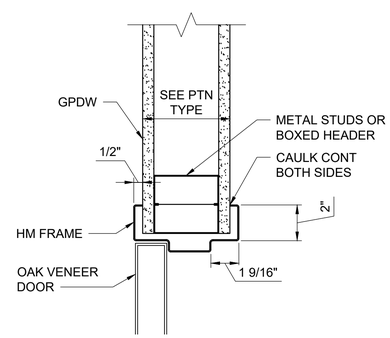

A
A-001 A-001 TYP DETAIL - DOOR JAMB
SCALE: 3" = 1'-0"

MATERIALS LEGEND

- WOOD BLOCKING
- SOLID WOOD
- BATT INSULATION
- GYPSUM DRYWALL PLASTER AND GROUT

BUBBLE SYMBOLS

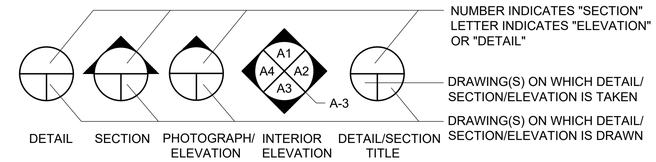

SYMBOLS LEGEND

- # NUMBERED NOTE NEW WORK
- # NUMBERED NOTE DEMOLITION
- # REVISION
- ### DOOR NUMBER
- ### ROOM NUMBER
- A WALL TYPE
- CENTERLINE, FLOOR LINE OR PROJECTED LINE
- PROPERTY LINE OR BOUNDARY LINE
- BREAK LINE
- REFLECTED OR CONCEALED LINE
- CEILING MOUNTED MECHANICAL DIFFUSERS AND RETURNS
- NEW WALL/PARTITION
- EXISTING WALL/PARTITION

ARCHITECTURAL ABBREVIATIONS

ACM	ASBESTOS CONTAINING MATERIALS	MECH	MECHANICAL
ACT	ACOUSTICAL CEILING TILE	MISC	MISCELLANEOUS
ADA	AMERICANS WITH DISABILITIES ACT	OC	ON CENTER
AFF	ABOVE FINISHED FLOOR	OCC	OCCUPANT
ALUM	ALUMINUM	PLAM	PLASTIC LAMINATE
CPSM	CONSTRUCTION & PROFESSIONAL SERVICES MANUAL	PTD	PAINTED
		PTN	PARTITION
CPT	CARPET	RB	RUBBER BASE
D	DEEP	RCP	REFLECTED CEILING PLAN
DEMO	DEMOLITION, DEMOLISH	REF	REFERENCE
EA	EACH	REQ'D	REQUIRED
ELEC	ELECTRICAL	SCHED	SCHEDULE
EXIST	EXISTING	SF	SQUARE FEET
FE	FIRE EXTINGUISHER	SIM	SIMILAR
GPDW	GYPSUM DRYWALL	SPEC	SPECIFICATION(S)
GSF	GROSS SQUARE FEET	STC	SOUND TRANSMISSION CLASS
GWB	GYPSUM WALL BOARD	TYP	TYPICAL
H	HIGH	W	WIDTH
HM	HOLLOW METAL	WD	WOOD
HW	HARDWARE	&	AND
MAX	MAXIMUM	±	PLUS OR MINUS

3"=1'-0" 0' 3" 6" 9" 1'

CLIENT	NVCC
JOB NO.	25-0296
DATE	05/15/2026
SCALE	AS NOTED
DRAWN	LJF
DESIGN	SJK
APPROVED	KDS
Q.C. REVIEW	SJK

NO.	REVISIONS	DATE

BROCKENBROUGH
A Stratus Team Company
1011 Boulder Springs Drive, Suite 200 | Richmond, VA 23225
804.592.3900 *main* | 804.592.3901 *fax*
www.brockenbrough.com

ABBREVIATIONS, LEGENDS AND NOTES

AN CA RENOVATE TESTING & WORKFORCE OFFICE
DEB PROJECT CODE: 260-B5260-054
VCCS PROJECT CODE: L24NV599
ANNANDALE VIRGINIA

COMMONWEALTH OF VIRGINIA
SEAN JIN KWAK
Lic. No. 014889
05/15/2026
ARCHITECT

SHEET 3 OF 12

A-001

FILE NAME: P:\ABA\25 Jobs\25-0296 CA Renovate Testing & Workforce Office - Annandale Campus NVCC\CAD\A\ABBREVIATIONS, LEGENDS AND NOTES.dwg LAYOUT NAME: ABBREVIATIONS, LEGENDS AND NOTES PLOTTED: Thursday, May 14, 2026 - 11:09am USER: tfeldkamp

ASBESTOS DISCLOSURE STATEMENT

AN ASBESTOS INSPECTION WAS NOT PERFORMED BECAUSE ALL PORTIONS OF THE EXISTING BUILDING THAT MAY BE AFFECTED BY THE WORK WERE ORIGINALLY CONSTRUCTED AFTER JANUARY 1, 1985.

LEAD PAINT DISCLOSURE STATEMENT

AN INSPECTION TO IDENTIFY LEAD CONTAINING OR COATED BUILDING COMPONENTS HAS NOT BEEN CONDUCTED BECAUSE THE BUILDING WAS CONSTRUCTED AFTER JANUARY 1, 1985 AND THE OWNER HAS NO KNOWLEDGE OF LEAD CONTAINING OR COATED BUILDING COMPONENTS IN THE BUILDING. IT IS THE CONTRACTOR'S RESPONSIBILITY TO COMPLY WITH ALL VIRGINIA OCCUPATIONAL SAFETY AND HEALTH (VOSH) REGULATIONS AS THEY PERTAIN TO EMPLOYEE EXPOSURES TO LEAD. **ALL LEAD AND LEAD-COATED BUILDING COMPONENTS SHALL BE RECYCLED TO THE EXTENT POSSIBLE.**

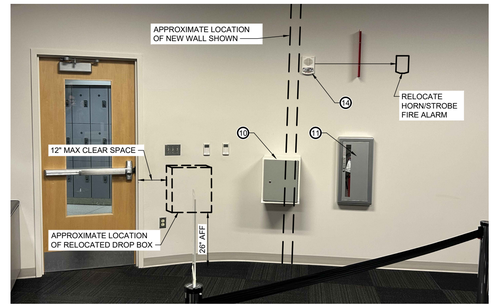

A AD-101 AD-101 PHOTO ELEVATION - DROPBOX & FEC
SCALE: NONE

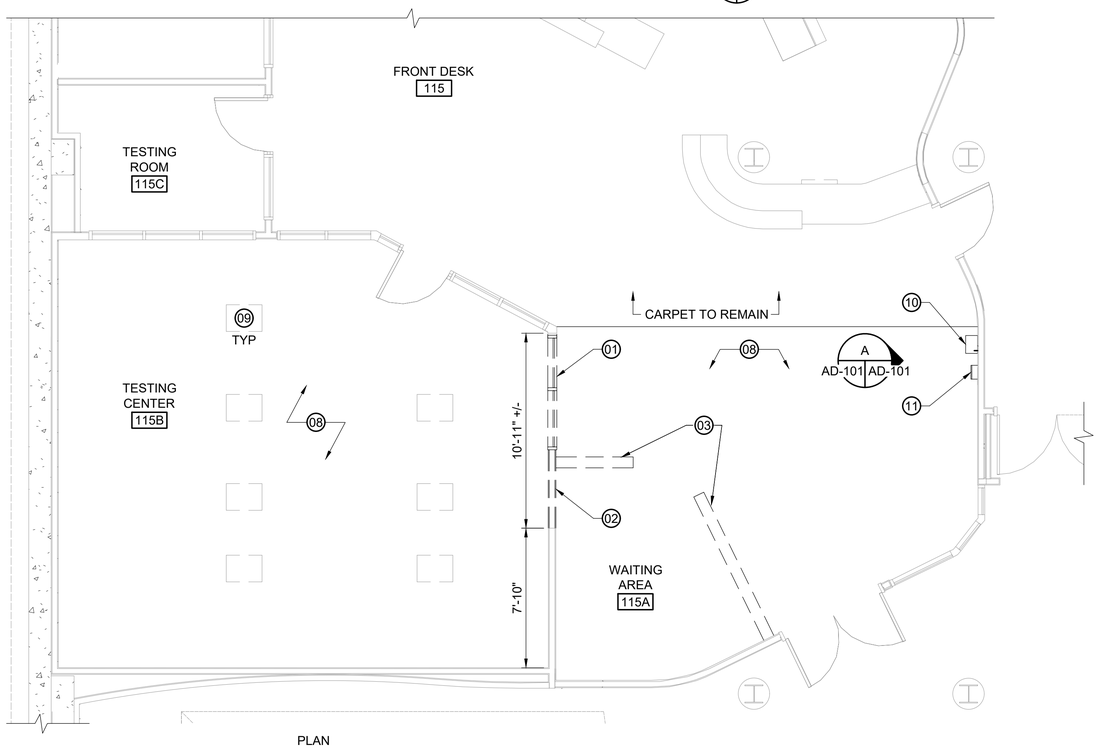

FIRST FLOOR DEMOLITION PLAN
SCALE: 1/4" = 1'-0"

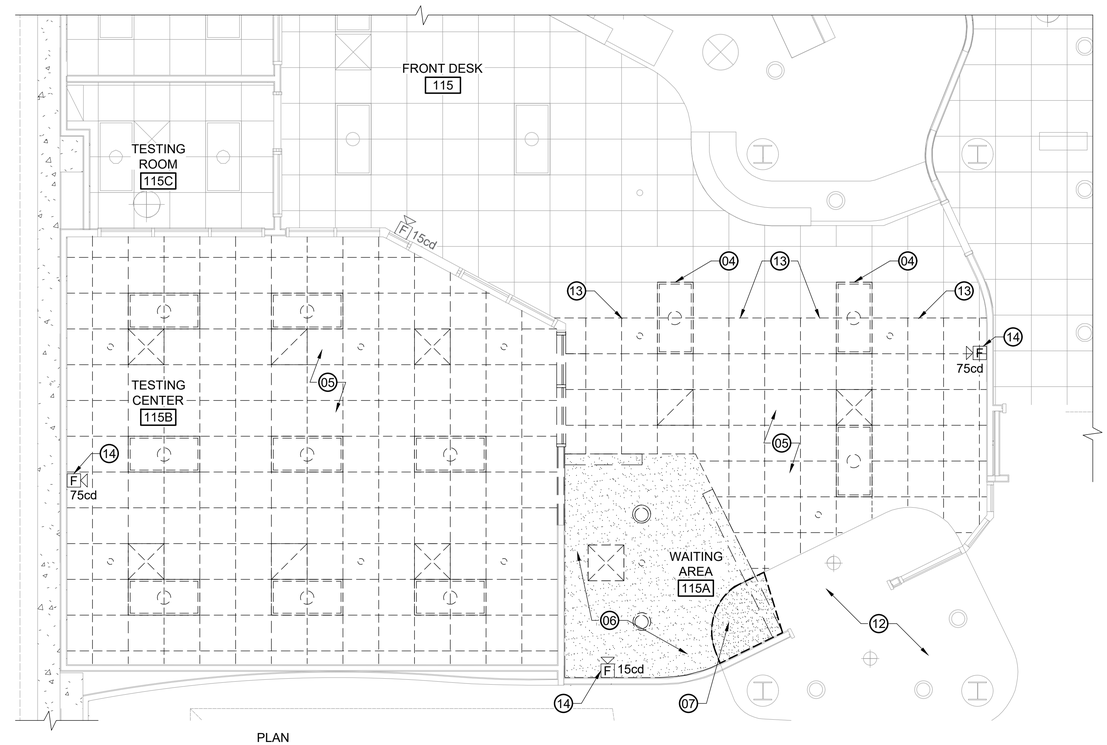

FIRST FLOOR DEMOLITION CEILING PLAN
SCALE: 1/4" = 1'-0"

GENERAL DEMOLITION NOTES

A. PROTECT ALL MATERIALS AND EQUIPMENT THAT ARE TO REMAIN.

B. REFER TO THE MECHANICAL, ELECTRICAL, AND SPRINKLER DRAWINGS FOR ADDITIONAL DEMOLITION WORK.

C. PATCH ALL HOLES AND DAMAGED SURFACES AFTER REMOVAL OF ITEMS, INCLUDING ARCHITECTURAL, MECHANICAL, AND ELECTRICAL ITEMS.

D. BUILDING OCCUPANTS WILL OCCUPY ADJACENT AREAS OF THE BUILDING DURING CONSTRUCTION. ALL FURNITURE AND OFFICE EQUIPMENT IN THE AREAS OF CONSTRUCTION WILL BE TEMPORARILY RELOCATED BY OWNER PRIOR TO START OF THE WORK.

E. PATCH AND REPAIR ALL FIRESTOPPING DAMAGED DURING DEMOLITION. WHERE RECESSED-MOUNTED BOXES ARE INDICATED FOR DEMOLITION, FIRE-RATING OF ASSEMBLY MUST BE PRESERVED. PATCH USING TYPE X GYPSUM BOARD SECURED TO FRAMING. COMPLY WITH GYPSUM BOARD MANUFACTURER'S INSTRUCTIONS FOR PATCHING FIRE-RATED PARTITIONS AND WITH SECTION 017300. COORDINATE ANY REQUIRED INSPECTION OF PATCH WITH OWNER.

KEYED DEMOLITION NOTES

01 DEMOLISH INTERIOR STOREFRONT WINDOW ASSEMBLY.

02 DEMOLISH INTERIOR GYPSUM BOARD WALL ASSEMBLY. SEE SHEET A-101 FOR NEW WORK.

03 DEMOLISH PARTIAL HEIGHT GYPSUM BOARD WALL.

04 REMOVE EXISTING LIGHT FIXTURE AND RETAIN FOR REINSTALLATION AT FRONT DESK AREA, SEE ELECTRICAL DRAWINGS.

05 DEMOLISH CEILING GRID, ACOUSTIC CEILING TILE, LIGHT FIXTURES AND MECHANICAL REGISTERS. PREPARE WALL SURFACES FOR INSTALLATION OF NEW CEILING. SEE SHEET A-101 FOR NEW WORK.

06 DEMOLISH GYPSUM CEILING, LIGHT FIXTURES AND MECHANICAL REGISTERS. PREPARE WALL SURFACES FOR INSTALLATION OF NEW CEILING. SEE SHEET A-101 FOR NEW WORK.

07 DEMOLISH DROPPED GYPSUM BOARD CEILING. COORDINATE EXTENTS OF CEILING DEMOLITION WITH LOCATION OF NEW WALL. PATCH EXISTING WALL ASSEMBLIES AS REQUIRED.

08 DEMOLISH EXISTING CARPET TILE FLOOR AND PREPARE FLOOR SURFACE FOR INSTALLATION OF NEW FLOORING.

09 EXISTING FLOOR BOX TO REMAIN, SEVEN (7) TOTAL.

10 REMOVE, CLEAN, AND STORE TEST DROP BOX FOR RELOCATION

11 REMOVE EXISTING FIRE EXTINGUISHER CABINET AND FLAG SIGNAGE AND REINSTALL ACCORDING TO LOCATION ON NEW WORK PLAN.

12 EXISTING DROPPED GYPSUM BOARD CEILING TO REMAIN.

13 MODIFY EXISTING CEILING GRID & TILE TO ACCOMMODATE NEW WALL.

14 RELOCATE EXISTING FIRE ALARM HORN/STROBE, SEE GENERAL NOTE E THIS SHEET.

1/4"=1'-0" 0' 1' 4' 8' 12'

CLIENT	NVCC
JOB NO.	25-0296
DATE	05/15/2026
SCALE	AS NOTED
DRAWN	LJF
DESIGN	SJK
APPROVED	KDS
Q.C. REVIEW	SJK

NO.	REVISIONS	DATE

BROCKENBROUGH
A Stratus Team Company
1011 Boulder Springs Drive, Suite 200 | Richmond, VA 23225
804.592.3900 *main* | 804.592.3901 *fax*
www.brockenbrough.com

FIRST FLOOR DEMO PLANS

AN CA RENOVATE TESTING & WORKFORCE OFFICE

DEB PROJECT CODE: 260-B5260-054
VCCS PROJECT CODE: L24NV599

ANNANDALE VIRGINIA

COMMONWEALTH OF VIRGINIA
SE JIN KWAK
Lic. No. 014889
05/15/2026
ARCHITECT

SHEET 4 OF 12

AD101

FILE NAME: P:\ABA25 Jobs\25-0296 CA Renovate Testing & Workforce Office - Annandale Campus NVCC\CAD\AD\FIRST FLOOR DEMO PLANS.dwg LAYOUT NAME: FIRST FLOOR DEMO PLANS PLOTTED: Thursday, May 14, 2026 - 11:09am USER: fleidkamp

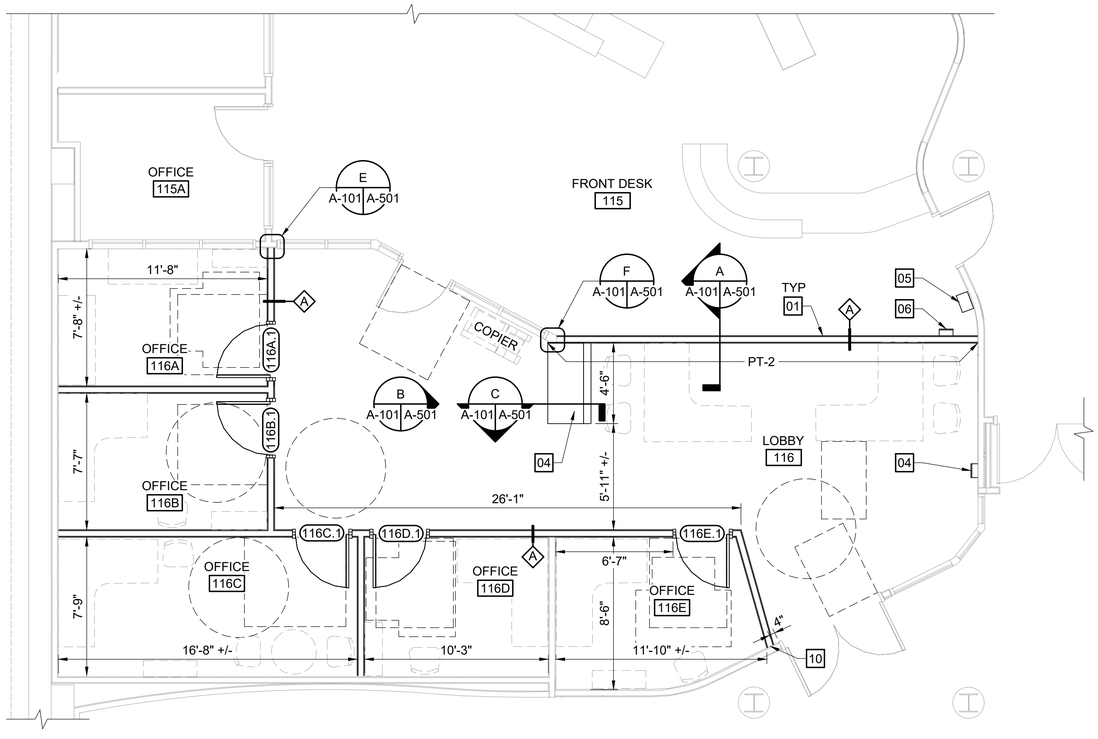

PLAN NORTH

FIRST FLOOR NEW WORK PLAN

SCALE: 1/4" = 1'-0"

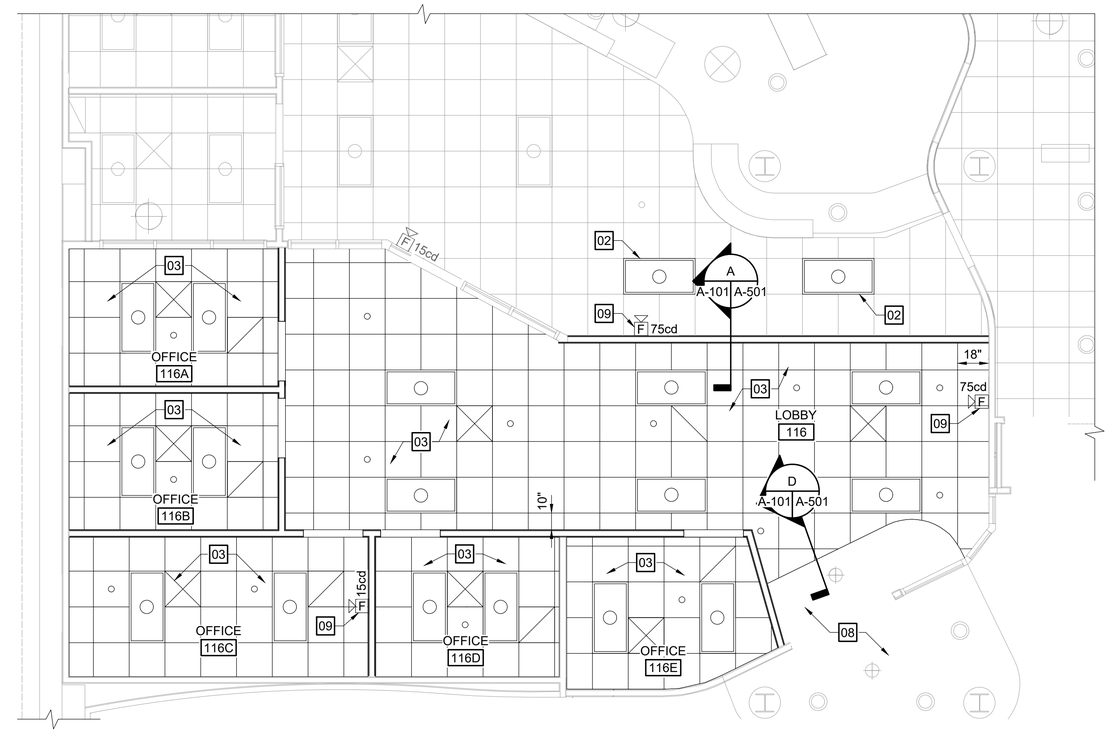

PLAN NORTH

FIRST FLOOR NEW WORK CEILING PLAN

SCALE: 1/4" = 1'-0"

GENERAL NOTES

A. DIMENSIONS ARE TO FACE OF FINISHES, UNLESS OTHERWISE NOTED.

B. LOCATE DOORS 4 INCHES FROM WALL CORNER, UNLESS OTHERWISE NOTED.

C. MECHANICAL AND ELECTRICAL EQUIPMENT SHOWN FOR REFERENCE. SEE MECHANICAL AND ELECTRICAL DOCUMENTS.

D. PRIOR TO STARTING WORK, THE GENERAL CONTRACTOR SHALL NOTIFY THE ARCHITECT OF ANY DISCREPANCIES IN THE PLANS. FIELD VERIFY ALL CRITICAL MEASUREMENTS.

E. COORDINATE WITH OWNER FOR LOCATION OF ITEMS TO BE HUNG ON NEW WALLS AND PROVIDE BLOCKING/BRACING REQUIRED.

F. ALL FURNITURE AND COPIER TO BE PROVIDED BY THE OWNER.

G. PROVIDE NEW FLOOR, WALL, AND CEILING FINISHES IN THE WORK AREA. SEE FINISH SCHEDULE.

H. SEE GENERAL NOTE 6 ON SHEET E-101 FOR REQUIREMENTS FOR NEW BOXES IN EXISTING FIRE-RATED WALLS.

KEYED NEW WORK NOTES

01 NEW FULL-HEIGHT PARTITION. SEE DETAIL A/501 FOR WALL ASSEMBLY.

02 RELOCATED LIGHT FIXTURE IN EXISTING CEILING GRID, SEE ELECTRICAL DRAWINGS.

03 NEW 2'X2' SUSPENDED CEILING GRID SYSTEM AS INDICATED MOUNTED 10'-0" ABOVE FINISH FLOOR. CENTER CEILING GRID SYSTEM IN ROOM UNLESS OTHERWISE NOTED.

04 RELOCATED FIRE EXTINGUISHER CABINET AND FLAG SIGNAGE, SEE A/AD-101. VERIFY FIRE EXTINGUISHER CABINET IS LISTED FOR INSTALLATION IN A 1-HR FIRE-RATED WALL AND REINSTALL PER EXISTING MANUFACTURER'S INSTRUCTIONS.

05 RELOCATED TEST DROP BOX +/- 18" FROM LATCH SIDE OF DOOR.

06 NEW FIRE EXTINGUISHER CABINET AND FLAG SIGNAGE TO MATCH EXISTING.

07 NEW CASEWORK AND PARTIAL HEIGHT WALL.

08 EXISTING GYPSUM BOARD SOFFIT TO REMAIN. PATCH, REPAIR, AND PAINT (TO MATCH EXISTING) PORTIONS DAMAGED DURING CONSTRUCTION.

09 NEW FIRE ALARM HORN STROBE LOCATION. CONNECT TO EXISTING FIRE ALARM SYSTEM

10 SIMILAR WALL CONNECTION AS DETAIL E/A-501. DO NOT INTERRUPT GWB MEMBRANE OF EXISTING WALL.

RCP LEGEND

- LIGHT FIXTURE
- MECHANICAL SUPPLY
- MECHANICAL RETURN
- SPRINKLER
- F COMBINATION HORN/STROBE

1/4"=1'-0" 0' 1' 4' 8' 12'

CLIENT	NVCC
JOB NO.	25-0296
DATE	05/15/2026
SCALE	AS NOTED
DRAWN	LJF
DESIGN	SJK
APPROVED	KDS
Q.C. REVIEW	SJK

NO.	REVISIONS	DATE

BROCKENBROUGH
A Stratus Team Company
1011 Boulder Springs Drive, Suite 200 | Richmond, VA 23225
804.592.3900 *main* | 804.592.3901 *fax*
www.brockenbrough.com

FIRST FLOOR NEW WORK PLANS

AN CA RENOVATE TESTING & WORKFORCE OFFICE

DEB PROJECT CODE: 260-B5260-054
VCCS PROJECT CODE: L24NV599

ANNANDALE VIRGINIA

COMMONWEALTH OF VIRGINIA
SE JIN KWAK
Lic. No. 014889
05/15/2026
ARCHITECT

SHEET 5 OF 12

A-101

FILE NAME: P:\ABA\25 Jobs\25-0296 CA Renovate Testing & Workforce Office - Annandale Campus NVCC\CAD\A\FIRST FLOOR NEW WORK PLANS.dwg LAYOUT NAME: FIRST FLOOR NEW WORK PLANS PLOTTED: Thursday, May 14, 2026 - 11:06am USER: lfeldkamp

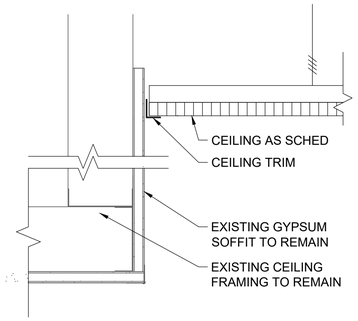

D DETAIL - CEILING SOFFIT
A-101 A-501 SCALE: 3" = 1'-0"

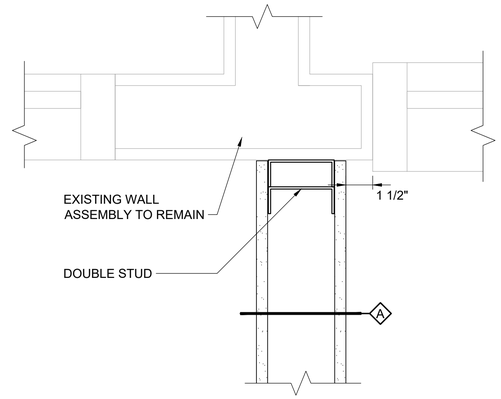

E DETAIL - WALL AT WINDOW
A-101 A-501 SCALE: 3" = 1'-0"

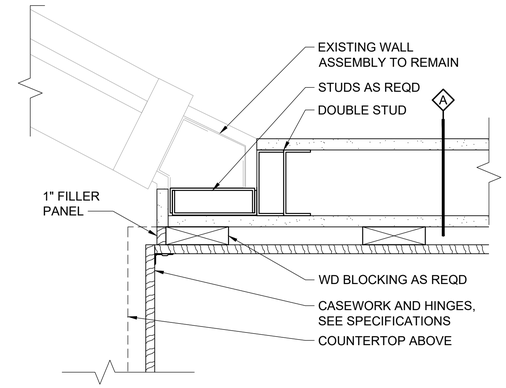

F PLAN DETAIL - WALL TRANSITION
A-101 A-501 SCALE: 3" = 1'-0"

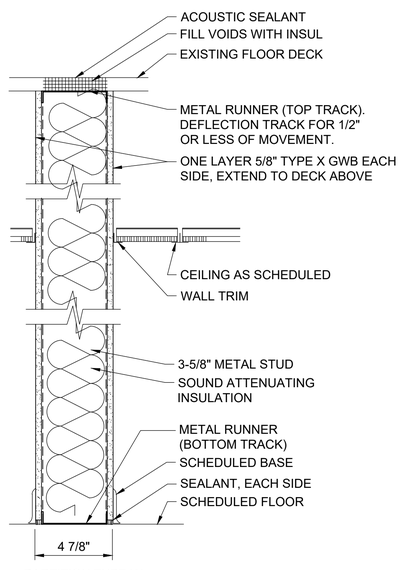

A WALL SECTION
A-101 A-501 SCALE: 3" = 1'-0"

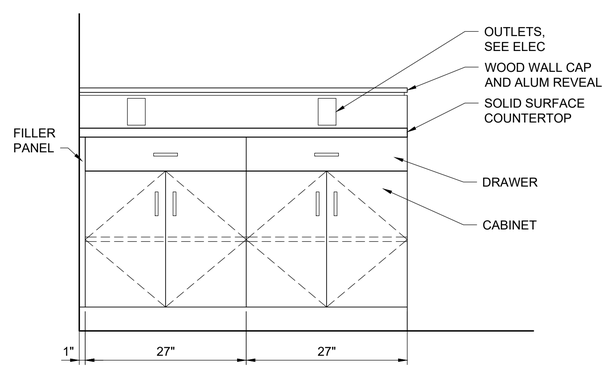

B ELEVATION - CASEWORK
A-101 A-501 SCALE: 1" = 1'-0"

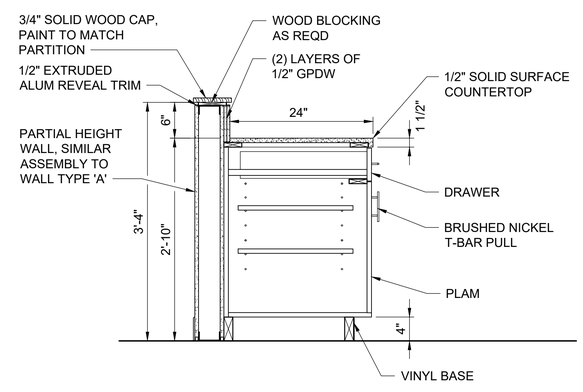

C DETAIL - CASEWORK
A-101 A-501 SCALE: 1" = 1'-0"

3"=1'-0" 0' 3" 6" 9" 1'
1"=1'-0" 0' 1' 2' 3'

CLIENT	NVCC
JOB NO.	25-0296
DATE	05/15/2026
SCALE	SJK AS NOTED
DRAWN	LJF
DESIGN	SJK
APPROVED	KDS
Q.C. REVIEW	SJK

NO.	REVISIONS	DATE

BROCKENBROUGH
A Stratus Team Company
1011 Boulder Springs Drive, Suite 200 | Richmond, VA 23225
804.592.3900 *main* | 804.592.3901 *fax*
www.brockenbrough.com

DETAILS

AN CA RENOVATE TESTING & WORKFORCE OFFICE

DEB PROJECT CODE: 260-B5260-054
VCCS PROJECT CODE: L24NV599

ANNANDALE VIRGINIA

COMMONWEALTH OF VIRGINIA
SE JIN KWAK
Lic. No. 014889
05/15/2026
ARCHITECT

SHEET 6 OF 12

A-501

FILE NAME: P:\ABA\25 Jobs\25-0296 CA Renovate Testing & Workforce Office - Annandale Campus NVCC\CAD\A\A-501 DETAILS.dwg LAYOUT NAME: DETAILS PLOTTED: Thursday, May 14, 2026 - 11:08am USER: lfeldkamp

FIRE PROTECTION NOTES

1. REWORK EXISTING SPRINKLER SYSTEM IN AND AROUND AREA OF CONSTRUCTION AS REQUIRED FOR NEW PARTITION LAYOUT IN ACCORDANCE WITH NFPA 13-2019. EXISTING SPRINKLER PIPES IN OPEN CEILING AREAS SHALL BE ELEVATED AS HIGH AS POSSIBLE. REFER TO ARCHITECTURAL DRAWINGS FOR DETAILS. ALL PIPES IN OPEN CEILING AREAS SHALL BE PAINTED, REFER TO ARCHITECTURAL DRAWINGS FOR DETAILS

2. ANY AND ALL SYSTEM SHUTDOWNS WILL REQUIRE SCHEDULING WITH THE OWNERS REPRESENTATIVE.

3. THE CONTRACTOR SHALL VERIFY ALL EXISTING CONDITIONS BEFORE COMMENCING WORK AND SHALL NOTIFY THE ARCHITECT IF A CONDITION EXISTS WHICH PREVENTS THE CONTRACTOR FROM ACCOMPLISHING THE INTENT OF THE DOCUMENTS. FAILURE TO NOTIFY THE ARCHITECT IN A TIMELY MANNER SHALL MEAN THE CONTRACTOR HAS PROCEEDED AT HIS OWN EXPENSE. NO ADDITIONAL COST WILL BE CONSIDERED FOR ANY REWORK REQUIRED BECAUSE OF EXISTING CONDITIONS NOT BEING AS INDICATED.

4. THE CONTRACTOR SHALL BE RESPONSIBLE FOR FINAL COORDINATION OF TRADES WITH EXISTING STRUCTURAL, PLUMBING, MECHANICAL, ELECTRICAL AND SPRINKLER SYSTEMS AND PROVIDING NECESSARY OFFSETS, TRANSITIONS, PIPE REROUTING, MATERIALS AND LABOR TO ARRANGE EQUIPMENT AND PIPING AS REQUIRED FOR A PROPER AND ACCESSIBLE INSTALLATION. CLOSE COORDINATION WILL BE REQUIRED FOR ALL SERVICES ABOVE CEILING.

6. ALL PENETRATIONS SHALL BE SLEEVED. PENETRATIONS IN RATED ENCLOSURES SHALL BE SEALED WITH APPROVED FIRE RESISTIVE MATERIALS. PENETRATIONS IN FINISHED AREAS SHALL HAVE ESCUTCHEON PLATES OR FINISHED FLANGES.

DEMOLITION:

7. THE CONTRACTOR SHALL CLOSELY COORDINATE LIMITS OF DEMOLITION WITH NEW WORK FOR THIS AREA.

8. THE CONTRACTOR SHALL BE RESPONSIBLE FOR REMOVING SCRAP MATERIALS AND DEBRIS ASSOCIATED WITH THIS WORK FROM THE SITE. ASCERTAIN AS TO WHAT MATERIAL OR EQUIPMENT IS TO REMAIN IN POSSESSION OF THE OWNER.

9. ALL EQUIPMENT AND PIPING, ETC. DESIGNATED FOR REMOVAL SHALL INCLUDE ALL HANGERS, SUPPORTS AND APPURTENANCES. ANY SERVICE NOT TOTALLY REMOVED OR REUSED SHALL BE CAPPED, SEALED, OR OTHERWISE TERMINATED IN AN ACCEPTABLE MANNER.

SPRINKLER SYSTEM:

10. ADVISE BUILDING OPERATOR BEFORE TAKING EXISTING SPRINKLER SYSTEMS OUT OF SERVICE. MINIMIZE INTERRUPTION OF EXISTING SPRINKLER SYSTEMS.

11. ARM-OVER PIPING SHALL BE 1".

12. NEW PIPING SHALL BE SHEDULE 40 BLACK STEEL WITH THREADED CONNECTIONS, MEETING ASTM A53 OR ASTM A795.

13. REFER TO ARCHITECTURAL REFLECTED CEILING PLAN FOR CEILING GRID. SPRINKLERS SHALL BE LOCATED IN THE CENTERS OF CEILING TILES AND ALIGNED ON THE CEILING.

14. SPRINKLER SYSTEM MODIFICATIONS SHALL BE PERFORMED BY A COMPANY REGULARLY ENGAGED IN THE INSTALLATION OF SPRINKLER SYSTEMS, EMPLOYING A NICET-CERTIFIED INDIVIDUAL WHO SHALL DIRECT THE PREPARATION OF SHOP DRAWINGS.

15. PIPE HANGERS SHALL BE IN ACCORDANCE WITH NFPA 13.

16. SPRINKLER SYSTEM COVERAGE SHALL BE BASED ON A LIGHT HAZARD OCCUPANCY, EXCEPT MECHANICAL ROOMS, ELECTRICAL ROOMS, JANITOR'S CLOSETS, AND STORAGE ROOMS, WHICH SHALL BE ORDINARY HAZARD (GROUP 1). THE MAXIMUM PROTECTION AREA PER SPRINKLER SHALL NOT EXCEED 225 S.F. IN LIGHT HAZARD SPACES OR 130 S.F. IN ORDINARY HAZARD SPACES.

17. NEW SPRINKLERS SHALL BE PENDENT, RECESSED TYPE TO MATCH EXISTING ON THE SAME FLOOR. TEMPERATURE RATING SHALL BE ORDINARY. ONLY NEW SPRINKLERS SHALL BE USED. NEW SPRINKLERS SHALL BE PLACE IN CENTER OF NEW CEILING TILE.

18. TORCH CUTTING AND FIELD WELDING SHALL BE PROHIBITED.

19. HYDROSTATICALLY TEST THE SYSTEM FOR A MINIMUM OF 2 HOURS AT 200 PSIG MEASURED AT THE SYSTEM RISER. REPAIR ALL LEAKS UNTIL THE SYSTEM IS TIGHT FOR 2 HOURS. HYDROSTATIC TESTS SHALL BE MADE AFTER SPRINKLERS HAVE BEEN INSTALLED. HYDROSTATIC TESTS SHALL BE WITNESSED BY THE OWNER'S REPRESENTATIVE. PROVIDE A MINIMUM OF 5 WORKING DAYS ADVANCE NOTICE PRIOR TO PERFORMING SUCH TESTS.

20. IN ADDITION TO THE REQUIRED HYDROSTATIC TEST, PERFORM AN AIR TEST AT 40 PSIG FOR 24 HOURS AS REQUIRED BY NFPA 13. CORRECT ALL LEAKS SUCH THAT THE MAXIMUM PRESSURE LOSS IS NOT MORE THAN 1½ PSIG.

21. UPON COMPLETION OF THE WORK, SUBMIT A CONTRACTOR'S MATERIAL AND TEST CERTIFICATE FOR ABOVEGROUND PIPING IN ACCORDANCE WITH NFPA 13.

22. WHERE SPRINKLER LOCATIONS ARE CHANGED, ONLY NEW SPRINKLERS SHALL BE USED. NEW SPRINKLERS SHALL MATCH THE EXISTING BUILDING STANDARD.

MECHANICAL GENERAL NOTES

1. ALL PERSONS PROPOSING TO SUBMIT QUOTATIONS IN ACCORDANCE WITH THESE PLANS AND SPECIFICATIONS ARE EXPECTED TO VISIT THE SITE OF THE WORK COVERED BY THE DOCUMENTS AND ARE TO FAMILIARIZE THEMSELVES WITH THE EXISTING CONDITIONS AS THEY AFFECT THE PROJECT. CLAIMS RESULTING FROM A FAILURE TO VISIT THE SITE OR INSPECT THE EXISTING CONDITIONS WILL NOT BE CONSIDERED.

2. THE BUILDING IS TO REMAIN OCCUPIED DURING THE ENTIRE CONSTRUCTION PERIOD. THE CONTRACTOR SHALL VERIFY IN ADVANCE WITH THE OWNERS REPRESENTATIVE FOR ACCESS TO AREAS OF CONSTRUCTION. ANY AND ALL SYSTEM SHUTDOWNS WILL REQUIRE SCHEDULING WITH THE OWNERS REPRESENTATIVE. THE CONTRACTOR IS ADVISED THAT SOME AREAS OF CONSTRUCTION WILL BE PERFORMED AFTER NORMAL WORKING HOURS.

3. THE CONTRACTOR SHALL VERIFY ALL EXISTING CONDITIONS BEFORE COMMENCING WORK AND SHALL NOTIFY THE ENGINEER IF A CONDITION EXISTS WHICH PREVENTS THE CONTRACTOR FROM ACCOMPLISHING THE INTENT OF THE DOCUMENTS. FAILURE TO NOTIFY THE ENGINEER IN A TIMELY MANNER SHALL MEAN THE CONTRACTOR HAS PROCEEDED AT HIS OWN EXPENSE. NO ADDITIONAL COST WILL BE CONSIDERED FOR ANY REWORK REQUIRED BECAUSE OF EXISTING CONDITIONS NOT BEING AS INDICATED.

4. THE CONTRACTOR SHALL FURNISH ALL LABOR, MATERIALS AND EQUIPMENT FOR THE COMPLETION OF ALL MECHANICAL WORK SHOWN ON THE DRAWINGS AND/OR SPECIFIED. THIS WILL INCLUDE ANY INCIDENTAL ACCESSORIES NECESSARY TO MAKE THE WORK COMPLETE IN ALL RESPECTS AND READY FOR OPERATION.

5. CONTRACTOR SHALL SUBMIT SHOP DRAWINGS, PRODUCT DATA AND SAMPLES TO THE ENGINEER FOR APPROVAL. WRITTEN SUBMITTALS SHALL BE FORWARDED IN SIX (6) COPIES AND CLEARLY MARKED TO INDICATE SPECIFIC ITEM, PERFORMANCE OR CAPACITIES, SIZE, COLOR AND LOCATION OF USE. ALL SUBMITTALS SHALL BE CHECKED, DATED, PRESENTED AND LABELED IN A CLEAR AND THOROUGH MANNER. SUBMITTALS SHALL INCLUDE, BUT ARE NOT LIMITED TO, THE FOLLOWING: DUCT ACCESSORIES, AIR DEVICES AND ALL PIPING AND ACCESSORIES. ALL ITEMS LISTED ON DRAWINGS AND/OR IN SPECIFICATIONS ARE NOT INTENDED TO PRECLUDE THE USE OF OTHER PRODUCTS. THE CONTRACTOR SHALL BE RESPONSIBLE FOR ALL MODIFICATIONS, REROUTING, RELOCATION AND VARIATIONS AT NO EXTRA COST TO THE OWNER WHEN AND IF SUBSTITUTED ITEMS ARE APPROVED FOR USE. ALL WORK SHALL BE PERFORMED IN ACCORDANCE WITH THE APPLICABLE STATE AND LOCAL CODES, THE NATIONAL FIRE PROTECTION ASSOCIATION (NFPA), THE ENVIRONMENTAL PROTECTION AGENCY (EPA) AND THE LOCAL AUTHORITIES HAVING JURISDICTION.

6. INFORMATION ON EXISTING SERVICES WAS TAKEN FROM DOCUMENTS PREPARED BY HDR AND LIMITED FIELD SURVEY.

7. THE CONTRACTOR SHALL BE RESPONSIBLE FOR FINAL COORDINATION OF TRADES WITH EXISTING STRUCTURAL, PLUMBING, MECHANICAL, ELECTRICAL AND SPRINKLER SYSTEMS AND PROVIDING NECESSARY OFFSETS, TRANSITIONS, PIPE REROUTING, MATERIALS AND LABOR TO ARRANGE EQUIPMENT, DUCTWORK AND PIPING AS REQUIRED FOR A PROPER AND ACCESSIBLE INSTALLATION. CLOSE COORDINATION WILL BE REQUIRED FOR ALL SERVICES ABOVE CEILING.

8. THE CONTRACTOR SHALL BE RESPONSIBLE FOR ALL LOW VOLTAGE WIRING AND CONDUITS SERVING ANY AUTOMATIC TEMPERATURE CONTROLS RELATED ITEMS. THIS INCLUDES BUT IS NOT LIMITED TO THERMOSTATS, MOTOR OPERATED DAMPER ACTUATORS, SMOKE DETECTORS, DUCT PRESSURE SENSORS, STATIC PRESSURE CONTROLLERS, END SWITCHES, FAN INTERLOCKS, CONTACTORS AND ALL ACCESSORIES FOR A FULLY FUNCTIONING AUTOMATIC TEMPERATURE CONTROLS SYSTEM.

9. ALL PENETRATIONS SHALL BE SLEEVED. PENETRATIONS IN RATED ENCLOSURES SHALL BE SEALED WITH APPROVED FIRE RESISTIVE MATERIALS. PENETRATIONS IN FINISHED AREAS SHALL HAVE ESCUTCHEON PLATES OR FINISHED FLANGES.

10. ALL ITEMS, EQUIPMENT AND ACCESSORIES INSTALLED IN PLENUMS SHALL BE PLENUM RATED.

DEMOLITION:

1. THE CONTRACTOR SHALL CLOSELY COORDINATE LIMITS OF DEMOLITION WITH NEW WORK FOR THIS AREA.

2. THE CONTRACTOR SHALL BE RESPONSIBLE FOR REMOVING SCRAP MATERIALS AND DEBRIS ASSOCIATED WITH THIS WORK FROM THE SITE. ASCERTAIN AS TO WHAT MATERIAL OR EQUIPMENT IS TO REMAIN IN POSSESSION OF THE OWNER.

3. ALL EQUIPMENT, DUCTWORK, PIPING, WIRING, ETC. DESIGNATED FOR REMOVAL SHALL INCLUDE ALL HANGERS, SUPPORTS AND APPURTENANCES. ANY SERVICE NOT TOTALLY REMOVED OR REUSED SHALL BE CAPPED, SEALED, OR OTHERWISE TERMINATED IN AN ACCEPTABLE MANNER.

DUCTWORK:

1. PROVIDE FINAL CONNECTION TO ALL EQUIPMENT FURNISHED BY OWNER AND/OR OTHERS.

2. THE CONTRACTOR SHALL BE RESPONSIBLE FOR PRE-CONSTRUCTION AND POST-CONSTRUCTION AIR BALANCE. POST-CONSTRUCTION BALANCING OF SYSTEM SHALL OBTAIN INDICATED AIRFLOW AT EACH AIR DEVICE AND/OR PIECE OF EQUIPMENT ACCORDING TO SMACNA STANDARDS (NEBB OR AABC STANDARDS ARE ALSO ACCEPTABLE).

3. THE ROUTING OF ALL DUCTWORK AS SHOWN ON THE DRAWINGS IS DIAGRAMMATIC ONLY, INTENDING TO SHOW GENERAL RUNS AND LOCATIONS OF EQUIPMENT, DUCTWORK AND SPECIALTIES. CONTRACTOR WILL BE RESPONSIBLE FOR THE EXACT LOCATION AND COORDINATION OF ALL ITEMS.

4. ALL DUCTWORK SHOWN ON PLANS OR INDICATED BY NOTES SHALL BE CONCEALED ABOVE CEILING OR IN WALLS UNLESS NOTED OTHERWISE.

5. SUPPLY DUCTWORK FROM N EXISTING VAV BOXES TO AIR DISTRIBUTION DEVICES SHALL BE LOW PRESSURE GALVANIZED SHEET METAL. NO FLEXIBLE DUCT BRANCHES IS ALLOWED.

6. RETURN AIR DUCT, AND GENERAL EXHAUST DUCTWORK SHALL BE LOW PRESSURE GALVANIZED SHEET METAL.
7. ALL DUCTWORK SHALL BE CONSTRUCTED IN ACCORDANCE WITH SHEET METAL AND AIR CONDITIONING CONTRACTORS NATIONAL ASSOCIATION (SMACNA): DUCT CONSTRUCTION STANDARDS, LATEST EDITION; SIZED PER EQUAL FRICTION METHOD BASED ON 0.07" (LOW PRESSURE) FRICTION LOSS PER 100 FT OF DUCT. ANY DEVIATIONS FROM THE FITTING TYPES AS SHOWN ON THE PLANS SHALL BE APPROVED BY THE ENGINEER PRIOR TO ANY FABRICATION OR INSTALLATION.

8. DUCTWORK PRESSURE CLASSIFICATIONS: ALL LOW PRESSURE DUCTWORK SHALL BE CONSTRUCTED AT MIN. +/- 2.0 IN WG. IF DUCTWORK'S FORESEEN STATIC PRESSURE IS HIGHER THAN +/- 2.0 IN WG (FOR LOW PRESSURE), THE NEXT AVAILABLE PRESSURE CLASS THAT IS GREATER THAN THE FORESEEN STATIC PRESSURE SHALL BE USED.

9. DUCTWORK SEALING: ALL DUCTWORK SHALL BE MASTIC SEALED. ALL DUCTWORK SHALL BE SEALED ACCORDING TO SMACNA 'STANDARD DUCT SEALING REQUIREMENTS TABLE'. ALL INDOOR DUCTWORK SHALL BE SEALED AT MINIMUM 'B' LEVEL; ALL OUTDOOR DUCTWORK OR DUCTWORK LOCATED IN UNCONDITIONED SPACE SHALL BE SEALED AT 'A' LEVEL.

10. ALL DUCT DIMENSIONS ARE IN INCHES AND ARE INSIDE CLEAR.

11. ALL DUCTWORK INCLUDING THE DUCT, DUCT FITTINGS, PLENUMS, AIR DEVICES, ETC. SCHEDULED TO BE WRAPPED (DW) SHALL BE INSULATED WITH FLEXIBLE FIBERGLASS INCLUDING FLAME RETARDANT LAMINATED KRAFT REINFORCED ALUMINUM FOIL VAPOR BARRIER. MINIMUM DENSITY SHALL BE 0.75 LB/CU FT. ALL INSULATION JOINTS SHALL BE TAPED. DUCTWRAP TAPE SHALL BE HIGH TENSILE ALUMINUM FOIL COATED ON ONE SIDE WITH A HIGH PERFORMANCE ACRYLIC ADHESIVE.

12. PROVIDE FLEXIBLE CONNECTION AT DUCTWORK CONNECTIONS TO ALL MECHANICAL EQUIPMENT SUBJECT TO VIBRATION.

13. ALL SUB-MAIN AND BRANCH DUCTS CONNECTION TO TRUNK DUCTS, SHALL HAVE BOOT FITTINGS WITH 45 DEG. FLARE (SQUARE TO ROUND CONNECTIONS SHALL ALSO HAVE 45 DEG. FLARE). PROVIDE AND INSTALL ALL REQUIRED DAMPERS TO ALLOW SYSTEMS TO BE BALANCED PER DRAWINGS. ALL DAMPERS SHALL BE INSTALLED AS CLOSE AS POSSIBLE TO THE BRANCH TAP, IN ORDER TO REDUCE NOISE AT DIFFUSERS/GRILLES.

14. ALL DUCT PENETRATIONS ON SMOKE PARTITION SHALL BE SEALED AIR-TIGHT.

HVAC LEGEND

PIPING SYMBOLS

- D — DRAIN LINE
- PIPE TURNING DOWN
- PIPE TURNING UP

DUCTWORK SYMBOLS

- M — MOTOR OPERATED DAMPER (MOD) W/ ACCESS DOOR
- MANUAL VOLUME DAMPER (MVD)
- S — FIRE AND SMOKE DAMPER
- FIRE DAMPER WITH ACCESS DOOR
- B — MOTORIZED BUBBLE TIGHT DAMPER
- AD — ACCESS DEVICE - SEE SPECIFICATIONS
- SUPPLY DUCT TURNING UP
- RETURN DUCT TURNING DOWN
- FLEXIBLE DUCT
- FLEXIBLE CONNECTION
- DN — OFFSET DUCT DOWN IN DIRECTION OF ARROW
- RETURN DUCT TURNING UP
- SUPPLY DUCT TURNING DOWN
- FLEXIBLE DUCT
- DUCT TRANSITION OR REDUCER
- SUPPLY DIFFUSER
- RETURN GRILLE OR REGISTER
- EXHAUST GRILLE OR REGISTER
- DIFFUSER, GRILLE OR REGISTER, 3 WAY FLOW

NOTE: ALL DUCT DIMENSIONS SHOWN ON DRAWINGS ARE IN INCHES AND INDICATE INSIDE FREE AREA UNLESS NOTED OTHERWISE.

MISCELLANEOUS ABREVIATIONS AND SYMBOLS

AC	AIR CONDITIONING
AFF	ABOVE FINISHED FLOOR
AHU	AIR HANDLING UNIT
CU	CONDENSING UNIT
DB	DRY BULB
DDC	DIRECT DIGITAL CONTROLS
DX	DIRECT EXPANSION
(E)	EXISTING
EA	EXHAUST AIR
EAT	ENTERING AIR TEMPERATURE
EF	EXHAUST FAN
ESP	EXTERNAL STATIC PRESSURE
GX	GENERAL EXHAUST
LAT	LEAVING AIR TEMPERATURE
OA	OUTDOOR AIR
MAU	MAKE-UP AIR UNIT
PD	PRESSURE DROP
RA	RETURN AIR
RF	RELIEF AIR
SA	SUPPLY AIR
SP	STATIC PRESSURE
TSP	TOTAL STATIC PRESSURE
WB	WET BULB
WG	WATER GAUGE
WMS	WIRE MESH SCREEN
T	THERMOSTAT OR TEMPERATURE SENSOR
H	HUMIDITY SENSOR
C	C02 SENSOR
S	WALL SWITCH
P	BALL-IN-THE-WALL TYPE PRESSURE MONITOR DEVICE
P	PRESSURE MONITORING DEVICE
#	PLAN KEYNOTES
△	REVISION NOTES
22x12	RECTANGULAR DUCT
12"Ø	ROUND DUCT
(+)	POSITIVE ROOM PRESSURIZATION
(-)	NEGATIVE ROOM PRESSURIZATION

NECK SIZE; DEVICE TYPE; CFM — S-1 6"Ø 100 — AIR DEVICE TAG

DEVICE TYPE:
- S: SUPPLY; R: RETURN; E: EXHAUST
- REL: RELOCATED
- EX: EXISTING TO REMAIN

65 — ROOM A (+) — ROOM B (-) — OFFSET 65 CFM FROM ROOM A TO ROOM B

AIR DISTRIBUTION DEVICE SCHEDULE

UNIT NUMBER	LOCATION	SERVICE	FACE SIZE	MATERIAL	BORDER	FINISH COLOR	SELECTION BASED ON		REMARKS/ ACCESSORIES
							MANUFACTURER	MODEL NO.	
S-1	CEILING	SUPPLY	24x24	ALUMINUM	LAY-IN	WHITE	PRICE	ASPD	1
R-1	CEILING	RETURN	24x24	ALUMINUM	LAY-IN	WHITE	PRICE	EC80	

1. PROVIDE OPPOSED BLADE DAMPER WITH TAMPER-PROOF SCREWDRIVER OPERATED MECHANISMS

MECHANICAL DUCTWORK INSULATION SCHEDULE

AL - ALUMINUM; ALG - ALUMAGUARD; PVC - POLYVINYL CHLORIDE

ITEMS	SYSTEM	LOCATION	INSULATION MATERIAL	THICK-NESS	FIELD APPLIED JACKET	REMARKS
DUCTWORK: LN - LINER; DW - DUCTWRAP; DB - DUCTBOARD						
SUPPLY AIR DUCT	ALL	INDOOR	DW	2"	-	
EXHAUST AIR DUCT	ALL	INDOOR	DW	2"	-	
TRANSFER AIR DUCT	ALL	INDOOR	LN	1"	-	

NOTES:
1. REFER TO PROJECT SPECIFICATION AND/OR SPECIFICATION NOTES ON DRAWINGS FOR PRODUCT MATERIAL INFORMATION AND INSTALLATION REQUIREMENTS
2. WHEN INSULATION IS REQUIRED (INTERNAL AND/OR EXTERNAL) ON SYSTEM PIPES OR DUCTWORK, ALL PIPE/DUCT ACCESSORIES SHALL BE PROVIDED WITH CONTINUOUS INSULATION.

Sheet List Table

Sheet Number	Sheet Title
M-001	LEGEND, NOTES AND SCHEDULES
M-002	DETAILS
M-101	FIRST FLOOR MECHANICAL PLANS - DEMO AND NEW WORK

Lu + S ENGINEERS
4924 Dominion Blvd, STE A
GLEN ALLEN, VA 23060
p: 804.925.2600 f: 804.925.2600
www.LSEngineers.net

COMMONWEALTH OF VIRGINIA
DAWEN LU
Lic. No. 035702
5/15/26
PROFESSIONAL ENGINEER

CLIENT	NVCC
JOB NO.	25-0296
DATE	05/15/2026
SCALE	AS NOTED

DRAWN	EZ	
DESIGN	EZ	
APPROVED	KDS	
Q.C. REVIEW	DLU	

NO.	REVISIONS	DATE

BROCKENBROUGH
A Stratus Team Company
1011 Boulder Springs Drive, Suite 200 | Richmond, VA 23225
804.592.3900 *main* | 804.592.3901 *fax*
www.brockenbrough.com

LEGEND, NOTES AND SCHEDULES

AN CA RENOVATION TESTING & WORKFORCE OFFICE

DEB PROJECT CODE: 260-B5260-054
VCCS PROJECT CODE: L24NV599

ANNANDALE VIRGINIA

SHEET 7 OF 12

M-001

FILE NAME: G:\25\25029\029-M01.dwg LAYOUT NAME: LAYOUT1 PLOTTED: Wednesday, May 13, 2026 - 5:33pm USER: User

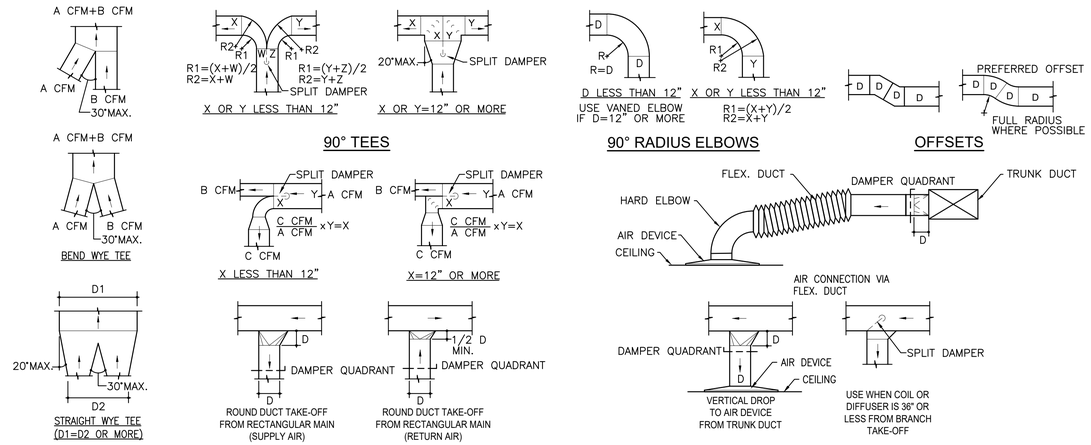

LOW PRESSURE DUCTWORK STANDARD

NOT TO SCALE
NOTE: ALL DUCTWORK FABRICATION SHALL MEET SMACNA STANDARD (LATEST EDITION)

NOTES:

1. ALL DUCT FITTING/ACCESSORIES SHALL CONFORM TO SMACNA STANDARDS.
2. FLEX DUCT SHALL NOT EXCEED 5 FEET.
3. ANY BENDS ON FLEX. DUCT SHALL BE MADE WITH NO LESS THAN ONE DUCT DIAMETER CENTERLINE RADIUS. FLEX DUCT SHALL NOT BE COMPRESSED.

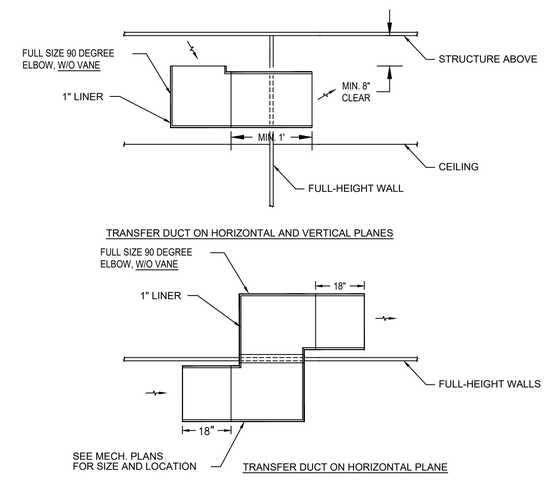

TRANSFER DUCT DETAIL

NOT TO SCALE
APPLIES TO ALL TRANSFER DUCT UNLESS NOTED OTHERWISE ON FLOOR PLANS

Lu + S ENGINEERS
4924 Dominion Blvd, STE A
GLEN ALLEN, VA 23060
p: 804.925.2600 f: 804.925.2600
www.LSEngineers.net

CLIENT	NVCC
JOB NO.	25-0296
DATE	05/15/2026
SCALE	AS NOTED
DRAWN	EZ
DESIGN	EZ
APPROVED	KDS
Q.C. REVIEW	DLU

NO.	REVISIONS	DATE

BROCKENBROUGH
A Stratus Team Company
1011 Boulder Springs Drive, Suite 200 | Richmond, VA 23225
804.592.3900 *main* | 804.592.3901 *fax*
www.brockenbrough.com

DETAILS

AN CA RENOVATION TESTING & WORKFORCE OFFICE

DEB PROJECT CODE: 260-B5260-054
VCCS PROJECT CODE: L24NV599

ANNANDALE VIRGINIA

COMMONWEALTH OF VIRGINIA
DAWEN LU
Lic. No. 035702
5/15/26
PROFESSIONAL ENGINEER

FILE NAME: G:\25\25029\029-M01.dwg LAYOUT NAME: LAYOUT2 PLOTTED: Wednesday, May 13, 2026 - 5:33pm USER: User

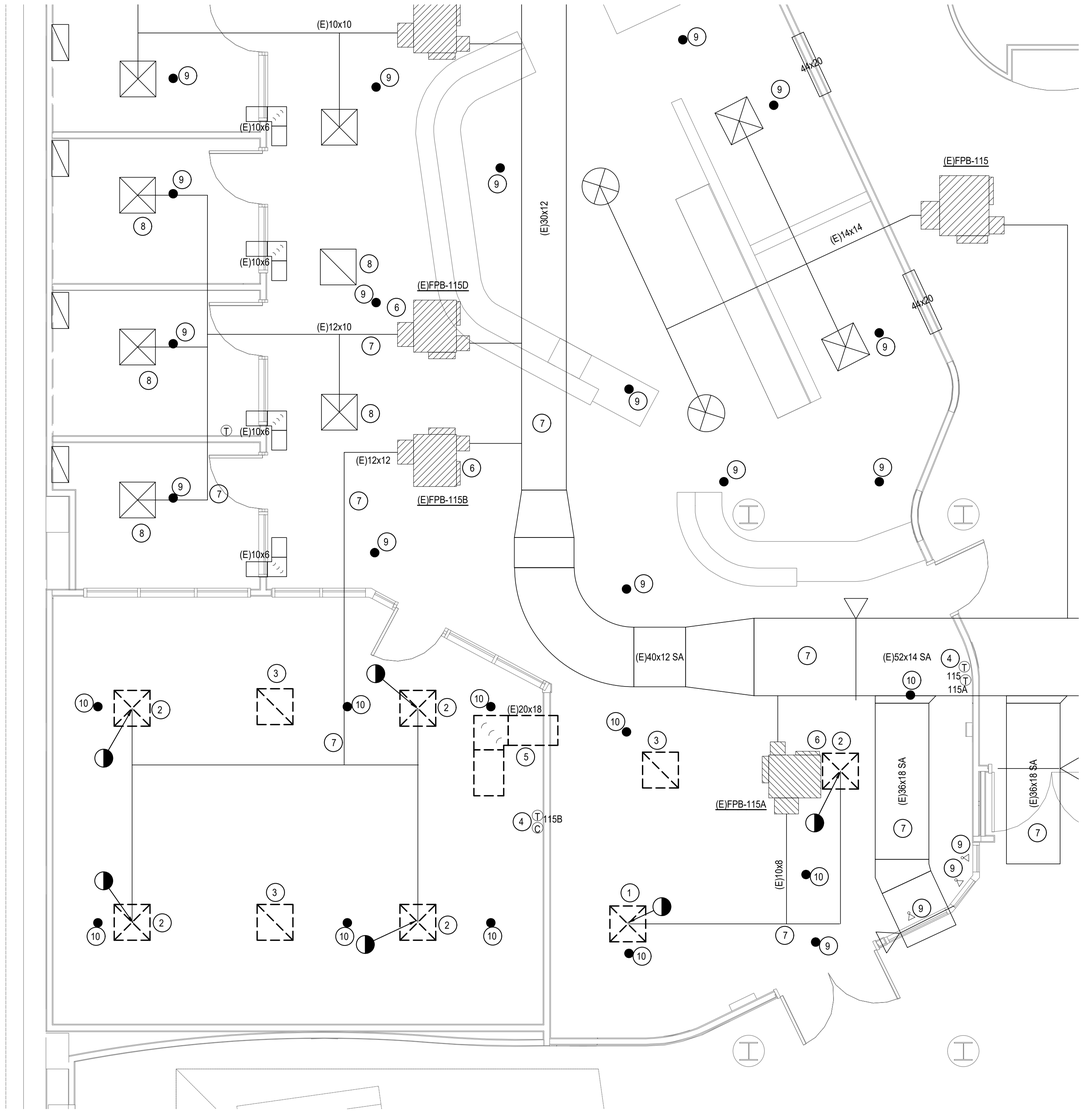

PLAN NORTH

FIRST FLOOR MECH PLAN - DEMOLITION

SCALE: 1/4" = 1'-0"

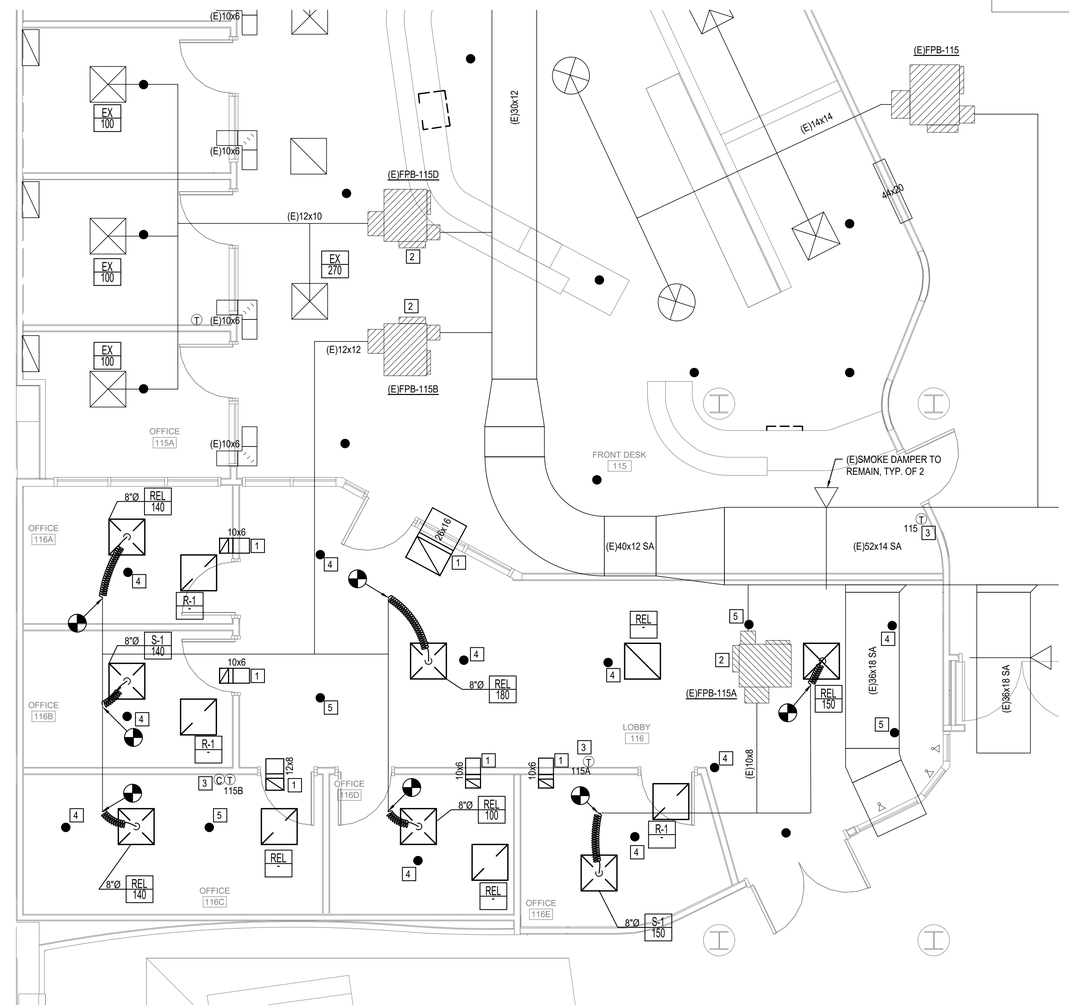

PLAN NORTH

FIRST FLOOR MECH PLAN - NEW WORK

SCALE: 1/4" = 1'-0"

DEMOLITION KEY NOTES

1. REMOVE EX. SA DIFFUSER
2. RELOCATE EX. SA DIFFUSER
3. RELOCATE EX. RA GRILLE
4. RELOCATE EX. T-STAT / CO2 SENSOR
5. REMOVE EX. TRANSFER DUCT
6. EX. FPB TO REMAIN AND RE-BALANCED
7. EX. DUCTWORK TO REMAIN
8. EX. SA DIFFUSER/RA GRILLE TO REMAIN
9. EX. SPRINKLER HEAD TO REMAIN
10. RELOCATE EX. SPRINKLER ON TO NEW CEILING

NEW WORK KEY NOTES

1. TRANSFER DUCT ABOVE CEILING. SEE DETAIL ON M0.2
2. REBALANCE EX. FPB TO THE FOLLOWING AIRFLOWS
   - (E)FPB-115B: 700 CFM, MIN. 225 CFM - 34% @ 77 CFM
   - (E)FPB -115A: 300 CFM, MIN. 135 CFM - 34% @ 46 CFM
   - (E)FPB-115D: 570 CFM, MIN. 114 CFM
   - (E)AHU-1: 35,380 CFM (SUPPLY); 12,000 CFM (OUTSIDE AIR) - 34% OA AT DESIGN FLOW.
   - CALCULATED VENTILATION AIR REQUIRED (2021 VEBC 603.5)
     - (E)FPB-115A: 3 PERSONS X 15CFM/PERSON = 45 CFM.
     - (E)FPB-115B: 5 PERSONS X 15CFM/PERSON = 75 CFM.
3. RELOCATED T-STAT/CO2 SENSOR
4. RELOCATED SPRINKLER HEAD TO THE CENTER OF THE CEILING TILE
5. NEW SPRINKLER HEAD TO THE CENTER OF THE CEILING TILE

Lu + S ENGINEERS
4924 Dominion Blvd, STE A
GLEN ALLEN, VA 23060
p: 804.925.2600 f: 804.925.2600
www.LSEngineers.net

1/4"=1'-0" 0' 1' 4' 8' 12'

CLIENT	NVCC
JOB NO.	25-0296
DATE	05/15/2026
SCALE	AS NOTED
DRAWN	EZ
DESIGN	EZ
APPROVED	KDS
Q.C. REVIEW	DLU

NO.	REVISIONS	DATE

BROCKENBROUGH
A Stratus Team Company
1011 Boulder Springs Drive, Suite 200 | Richmond, VA 23225
804.592.3900 *main* | 804.592.3901 *fax*
www.brockenbrough.com

FIRST FLOOR MECHANICAL PLANS - DEMO AND NEW WORK

AN CA RENOVATION TESTING & WORKFORCE OFFICE

DEB PROJECT CODE: 260-B5260-054
VCCS PROJECT CODE: L24NV599

ANNANDALE VIRGINIA

COMMONWEALTH OF VIRGINIA
DAWEN LU
Lic. No. 035702
5/15/26
PROFESSIONAL ENGINEER

SHEET 9 OF 12

M-101

FILE NAME: G:\25\2502\9\203-M21.dwg LAYOUT NAME: LAYOUT1 PLOTTED: Wednesday, May 13, 2026 - 5:33pm USER: User

UL Product iQ®

Design/System/Construction/Assembly Usage Disclaimer

- Authorities Having Jurisdiction should be consulted in all cases as to the particular requirements covering the installation and use of UL Certified products, equipment, system, devices, and materials.
- Authorities Having Jurisdiction should be consulted before construction.
- Fire resistance assemblies and products are developed by the design submitter and have been investigated by UL for compliance with applicable requirements. The published information cannot always address every construction nuance encountered in the field.
- When field issues arise, it is recommended the first contact for assistance be the technical service staff provided by the product manufacturer noted for the design. Users of fire resistance assemblies are advised to consult the general Guide Information for each product category and each group of assemblies. The Guide Information includes specifics concerning alternate materials and alternate methods of construction.
- Only products which bear UL's Mark are considered Certified.

XHEZ - Through-penetration Firestop Systems

System No. W-L-1001

June 15, 2005

F Ratings — 1, 2, 3 and 4 Hr (See Items 2 and 3) T Ratings — 0, 1, 2, 3, and 4 Hr (See Item 3) L Rating At Ambient — less than 1 CFM/sq ft L Rating At 400 F — less than 1 CFM/sq ft

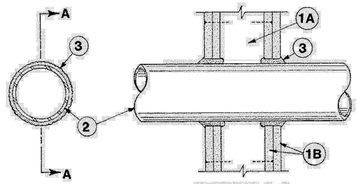

SECTION A–A

1. **Wall Assembly —** The 1, 2, 3 or 4 hr fire-rated gypsum wallboard/stud wall assembly shall be constructed of the materials and in the manner described in the individual U300 or U400 Series Wall or Partition Designs in the UL Fire Resistance Directory and shall include the following construction features:

A. **Studs —** Wall framing may consist of either wood studs (max 2 h fire rated assemblies) or steel channel studs. Wood studs to consist of nom 2 by 4 in. (51 by 102 mm) lumber spaced 16 in. (406 mm) OC with nom 2 by 4 in. (51 by 102 mm) lumber end plates and cross braces. Steel studs to be min 3-5/8 in. (92 mm) wide by 1-3/8 in. (35 mm) deep channels spaced max 24 in. (610 mm) OC.

B. **Gypsum Board* —** Nom 1/2 or 5/8 in. (13 or 16 mm) thick, 4 ft. (122 cm) wide with square or tapered edges. The gypsum wallboard type, thickness, number of layers, fastener type and sheet orientation shall be as specified in the individual U300 or U400 Series Design in the UL Fire Resistance Directory. Max diam of opening is 26 in. (660 mm).

2. **Through-Penetrant —** One metallic pipe, conduit or tubing installed either concentrically or eccentrically within the firestop system. The annular space between pipe, conduit or tubing and periphery of opening shall be min of 0 in / (0 mm). (point contact) to max 2 in. (51 mm) Pipe, conduit or tubing to be rigidly supported on both sides of wall assembly. The following types and sizes of metallic pipes, conduits or tubing may be used:

A. **Steel Pipe —** Nom 24 in. (610 mm) diam (or smaller) Schedule 10 (or heavier) steel pipe.

B. **Iron Pipe —** Nom 24 in. (610 mm) diam (or smaller) service weight (or heavier) cast iron soil pipe, nom 12 in (305 mm) diam (or smaller) or Class 50 (or heavier) ductile iron pressure pipe.

C. **Conduit —** Nom 6 in. (152 mm) diam (or smaller) steel conduit or nom 4 in (102 mm) diam (or smaller) steel electrical metallic tubing

D. **Copper Tubing —** Nom 6 in. (152 mm) diam (or smaller) Type L (or heavier) copper tubing

E. **Copper Pipe —** Nom 6 in. (152 mm) diam (or smaller) Regular (or heavier) copper pipe.

F. **Through Penetrating Product* —** Flexible Metal Piping The following types of steel flexible metal gas piping may be used:

1. Nom 2 in. (51 mm) diam (or smaller) steel flexible metal gas piping. Plastic covering on piping may or may not be removed on both sides of floor or wall assembly.
OMEGA FLEX INC

2. Nom 1 in. (25 mm) diam (or smaller) steel flexible metal gas piping. Plastic covering on piping may or may not be removed on both sides of floor or wall assembly.
GASTITE, DIV OF TITEFLEX

3. Nom 1 in. (25 mm) diam (or smaller) steel flexible metal gas piping. Plastic covering on piping may or may not be removed on both sides of floor or wall assembly.
WARD MFG L L C

3. **Fill, Void or Cavity Material* — Caulk or Sealant —** Min 5/8 , 1-1/4,1-7/8 and 2-1/2 in. (16, 32, 48 and 64 mm) thickness of caulk for 1, 2, 3 and 4 hr rated assemblies, respectively, applied within annulus, flush with both surfaces of wall. Min 1/4 in. (6 mm) diam bead of caulk applied to gypsum board/penetrant interface at point contact location on both sides of wall. The hourly F Rating of the firestop system is dependent upon the hourly fire rating of the wall assembly in which it is installed, as shown in the following table. The hourly T Rating of the firestop system is dependent upon the type or size of the pipe or conduit and the hourly fire rating of the wall assembly in which it is installed, as tabulated below:

Max Pipe or Conduit Diam In (mm)	F Rating Hr	T Rating Hr
1 (25)	1 or 2	0+, 1 or 2
1 (25)	3 or 4	3 or 4
4 (102)	1 or 2	0
6 (152)	3 or 4	0
12 (305)	1 or 2	0

The appearance of a company's name or product in this database does not in itself assure that products so identified have been manufactured under UL Solutions' Follow - Up Service. Only those products bearing the UL Mark should be considered to be Certified and covered under UL Solutions' Follow - Up Service. Always look for the Mark on the product.

UL Solutions permits the reproduction of the material contained in Product iQ subject to the following conditions: 1. The Guide Information, Assemblies, Constructions, Designs, Systems, and/or Certifications (files) must be presented in their entirety and in a non-misleading manner, without any manipulation of the data (or drawings). 2. The statement "Reprinted from Product iQ with permission from UL Solutions" must appear adjacent to the extracted material. In addition, the reprinted material must include a copyright notice in the following format: "©2024 UL LLC."

+When copper pipe is used, T Rating is 0 h.

3M COMPANY — CP 25WB+ or FB-3000 WT.

Last Updated on 2005-06-15

A
E-001 1

PENETRATION FIRESTOPPING DETAIL

SCALE: NONE

© 2024 UL LLC

REPRINTED FROM PRODUCT iQ WITH PERMISSION FROM UL SOLUTIONS

GENERAL LEGEND

- DEMOLITION KEYED NOTE, SEE "DEMOLITION NOTES" EACH SHEET
- NEW WORK KEYED NOTE, SEE "NEW WORK NOTES" EACH SHEET
- LIGHTING FIXTURE TAG, SEE "LIGHTING FIXTURE SCHEDULE" E-401
- CONNECT TO EXISTING
- 1-HOUR FIRE RATED WALL, EXISTING

LIGHTING LEGEND

- 2 x 4 LED TROFFER, TYPE AS INDICATED
- 2 x 4 LED TROFFER, TYPE AS INDICATED. CONNECT TO EMERGENCY POWER
- LED DOWNLIGHT, EXISTING
- EXIT SIGN, WALL MOUNT, SHADED SIDES INDICATES FACE(S) OF SIGN, DIRECTIONAL CHEVRONS AS INDICATED
- OCCUPANCY SENSOR, DUAL TECHNOLOGY, CEILING-MOUNTED, SUITABLE FOR 10' MOUNTING HEIGHT
- S_{OS} LIGHT SWITCH, 120/277-VOLT, 1HP RATED. MOUNT 44" AFF

  SUBSCRIPT INDICATES TYPE OF SWITCH: OS - OCCUPANCY SENSOR SWITCH W/ DIMMER

  LOWERCASE LETTER, WHERE PRESENT, INDICATES FIXTURE CONTROL

POWER LEGEND

- SPLIT-CONTROLLED RECEPTACLE, MOUNT +18" AFF, UON. SEE DETAIL A/E-601
- PANELBOARD, 480Y/277-VOLT, 3-PHASE
- PANELBOARD, 208Y/120-VOLT, 3-PHASE
- BRANCH CIRCUIT HOMERUN, WIRE TICK MARKS INDICATE CONDUCTORS, PROVIDE #12 AWG, 3/4"C OR AS INDICATED

  INDICATES PHASE CONDUCTOR
  INDICATES NEUTRAL CONDUCTOR
  INDICATES GROUND CONDUCTOR
- FB1 FLOOR BOX, EXISTING. BOX CONTAINS (2) DUPLEX RECEPTACLE AND (2) DUAL-PORT DATA OUTLETS
- DUPLEX RECEPTACLE, EXISTING

TELECOM LEGEND

- DATA OUTLET, MOUNT +18" AFF, UON. PROVIDE 1"C WITH PULL STRING AND BUSHING STUBBED ABOVE ACCESSIBLE CEILING, WIRING PROVIDED BY OTHERS
- CONDUIT SLEEVE, 2" NOMINAL DIAMETER, MOUNT +6" ABOVE CEILING, UON
- DATA OUTLET, EXISTING

GENERAL NOTES

1. USE MOUNTING HEIGHTS INDICATED ON THE LEGEND EXCEPT WHERE INDICATED ON THE DRAWINGS. MOUNTING HEIGHTS ARE MEASURED FROM THE MIDDLE OF WALL MOUNTED DEVICES.
2. ALL WIRING MUST BE RUN IN CONDUIT, MIN 3/4" TRADE SIZE. IN FINISHED SPACES ROUTE CONDUITS CONCEALED. METALLIC CONDUITS SHALL BE BONDED AT BOTH ENDS USING A GROUNDING BUSHING.
3. PROVIDE TYPE WRITTEN PANELBOARD DIRECTORIES IN PLASTIC SLEEVES. USE OWNER'S FINAL SPACE DESIGNATIONS.
4. NEW FEATURES ARE SHOWN USING A HEAVY LINE WEIGHT. EXISTING FEATURES ARE GENERALLY SHOWN USING A LIGHT LINE WEIGHT SIMILAR TO THIS TEXT.
5. PERFORM ALL WORK IN ACCORDANCE WITH NATIONAL ELECTRICAL CODE (2020), VIRGINIA UNIFORM STATEWIDE BUILDING CODE (2021), VIRGINIA CONSTRUCTION CODE (2021), ADA STANDARDS FOR ACCESSIBLE DESIGN (2010).
6. ALL WORK, INCLUDING CUTTING AND PATCHING, MUST BE COMPLETED IN A WORKMANLIKE MANNER.
7. ALL CONDUITS MUST BE LABELED WITH SOURCE AND DESTINATION LABELS. LABELS MUST BE LARGE ENOUGH TO BE READ FROM THE FLOOR AND ARE REQUIRED AT THE ORIGIN POINT, DESTINATION POINT, ALL PULL BOXES, JUNCTION BOXES, BOTH SIDES OF WALL PENETRATIONS, AND AT ALL OTHER POSSIBLE OBSTRUCTED VIEWS.
8. ALL EQUIPMENT AND DEVICE AND JUNCTION BOXES MUST INCLUDE CIRCUIT AND PANEL NUMBER AND BE A MINIMUM OF 3/4" TALL TYPE BLACK LETTERS ON WHITE BACKGROUND. ALL LABELS MUST BE MACHINE-GENERATED SELF-ADHESIVE TYPE.
9. ALL ELECTRICAL WORK, INCLUDING SERVICE AND EQUIPMENT, MUST BE CONDUCTED ON DE-ENERGIZED SYSTEMS AND COMPONENTS. ENERGIZED ELECTRICAL WORK MUST NOT BE PERMITTED. WHERE CONTINUOUS SERVICE IS REQUIRED TO EXISTING EQUIPMENT, AN ALTERNATIVE MEANS OF SERVICE MUST BE PROVIDED AND INSTALLED UNTIL THE REQUIRED WORK HAS BEEN COMPLETED. IF ENERGIZED ELECTRICAL WORK IN THE PANELBOARD OR EQUIPMENT IS NECESSARY, A HOT WORK PERMIT IS REQUIRED AND MUST BE SIGNED BY FIRE DEPARTMENT PRIOR TO COMMENCING WORK.
10. CONTRACTOR MUST PERFORM LOCK OUT TAG OUT (LOTO) PROCEDURES COMPLIANT WITH OSHA TITLE 29 CODE OF FEDERAL REGULATIONS (CFR) PART 1910.147.
11. FIRE RATINGS OF WALL ARE AS INDICATED ON PLANS. PROVIDE FIRESTOPPING FOR ALL PENETRATIONS THROUGH FRAMED GYPSUM BOARD ASSEMBLIES ACCORDING TO DETAIL A/E-001.

GENERAL DEMOLITION NOTES

1. DEMOLITION DRAWINGS ARE PROVIDED AS REFERENCE ONLY. DEMOLITION DRAWINGS ARE BASED ON NON-DESTRUCTIVE FIELD INVESTIGATION AND EXISTING DRAWINGS.
2. VISIT THE PROJECT SITE AND BECOME FAMILIAR WITH EXISTING FIELD CONDITIONS PRIOR TO PROCEEDING WITH THE WORK.
3. DISPOSE OF, IN A LEGAL MANNER, ALL MATERIALS INDICATED FOR REMOVAL AND NOT INDICATED FOR REUSE OR SALVAGE.
4. REMOVE UNUSED CABLING AND CONDUCTORS ALL THE WAY BACK TO THE SOURCE. EXISTING CONDUITS MAY BE ABANDONED IN THE WALLS, FLOOR SLAB, AND BELOW GRADE ONLY. REMOVE CONDUITS TO THE SURFACE OF THE WALL/FLOOR AND PATCH.

ABBREVIATIONS

@	AT
Δ	DELTA
Ø	PHASE OR DIAMETER
A, AMP	AMPERES
AF	AMPS FRAME RATING
AFF	ABOVE FINISHED FLOOR
AT	AMPS TRIP RATING
AWG	AMERICAN WIRE GAUGE
C	CONDUIT
CB	CIRCUIT BREAKER
CKT	CIRCUIT
DISC	DISCONNECT
DISTR	DISTRIBUTION
ELEC	ELECTRICAL
EXIST	EXISTING
G, GND	GROUND
GEC	GROUNDING ELECTRODE CONDUCTOR
GFI	GROUND-FAULT INTERRUPTING
HP	HORSEPOWER
HVAC	HEATING/VENTILATION/AIR CONDITIONING
KAIC	THOUSAND AMPERE INTERRUPTING CAPACITY
KCMIL	THOUSAND CIRCULAR MILS
KVA	KILO VOLT AMPERES
LTG	LIGHTING
MAX	MAXIMUM
MCB	MAIN CIRCUIT BREAKER
MIN	MINIMUM
MISC	MISCELLANEOUS
MLO	MAIN LUGS ONLY
MTR	MOTOR
N	NEUTRAL
NEC	NATIONAL ELECTRICAL CODE
NEMA	NATIONAL ELECTRICAL MANUFACTURERS ASSOCIATION
OSHA	OCCUPATIONAL SAFETY AND HEALTH ADMINISTRATION
PNL	PANEL(BOARD)
RCPT	RECEPTACLE
RM	ROOM
TYP	TYPICAL
UL	UNDERWRITERS LABORATORY
UON	UNLESS OTHERWISE NOTED
V	VOLTS
VA	VOLT-AMPERES
W	WIRE OR WATT
W/	WITH
XFMR	TRANSFORMER

LIGHTING FIXTURE SCHEDULE

FIXTURE SYMBOL	DESCRIPTION	TYPE OF LAMPS	VOLTAGE	CCT (K)	WATTS	NOMINAL LUMENS	BASIS OF DESIGN MANUFACTURER & MODEL	MOUNTING	NOTES
A	TROFFER	LED	277	3500	46W	6000	LITHONIA 2BLT4-60L-ADP-GZ10-LP835 UTOPIA RDI-24-36L-35K-DF2-UNV-GR CORELITE RX-WO-60H-8-35-UNV-24-T1-STD	LAY-IN	2x4 LED VOLUMETRIC TROFFER, 80+ CRI, DIM TO MIN 10%, RIBBED DIFFUSER
X	TROFFER	(2) 28T5	277	3500	28W	3000	EXISTING / RETAINED FROM DEMOLITION	LAY-IN	2x4 FLUORESCENT VOLUMETRIC TROFFER, EXACT MODEL UNKNOWN, WATTS AND LUMENS INDICATED ARE PER LAMP

NOTE: THREE COMPARABLE MANUFACTURERS AND MODEL NUMBERS ARE PROVIDED FOR EACH LIGHT FIXTURE TYPE. THIS DOES NOT LIMIT THE CONTRACTOR TO THOSE MODELS LISTED, BUT IS INTENDED TO GUIDE IN SELECTING FIXTURES TO MEET THE DESIGN INTENT. MANUFACTURERS AND MODELS OTHER THAN THOSE LISTED WILL BE CONSIDERED FOR APPROVAL IF THE SUBMITTED FIXTURE MEETS THE DESIGN INTENT AND HAS SIMILAR APPEARANCE, FEATURES, AND FUNCTIONALITY.

CLIENT	NVCC
JOB NO.	25-0296
DATE	05/15/2026
DRAWN	DEH
DESIGN	DEH
APPROVED	KDS
Q.C. REVIEW	DST
SCALE	AS NOTED

NO.	REVISIONS	DATE

BROCKENBROUGH
A Stratus Team Company
1011 Boulder Springs Drive, Suite 200 | Richmond, VA 23225
804.592.3900 *main* | 804.592.3901 *fax*
www.brockenbrough.com

ELECTRICAL ABBREVIATIONS, LEGEND, NOTES

AN CA RENOVATE TESTING & WORKFORCE OFFICE

DEB PROJECT CODE: 260-B5260-054
VCCS PROJECT CODE: L24NV599

ANNANDALE VIRGINIA

COMMONWEALTH OF VIRGINIA
DUSTIN THIESSE
Lic. No. 052289
05/15/2026
PROFESSIONAL ENGINEER

SHEET 10 OF 12

E-001

FILE NAME: P:\ABA\25 Jobs\25-0296 CA Renovate Testing & Workforce Office - Annandale Campus NVCC\CAD\E\E-001 ELECTRICAL ABBREVIATIONS, LEGEND, NOTES.dwg LAYOUT NAME: E-001 ELECTRICAL ABBREVIATIONS, LEGEND, NOTES PLOTTED: Thursday, May 14, 2026 - 11:09am USER: lfeldkamp

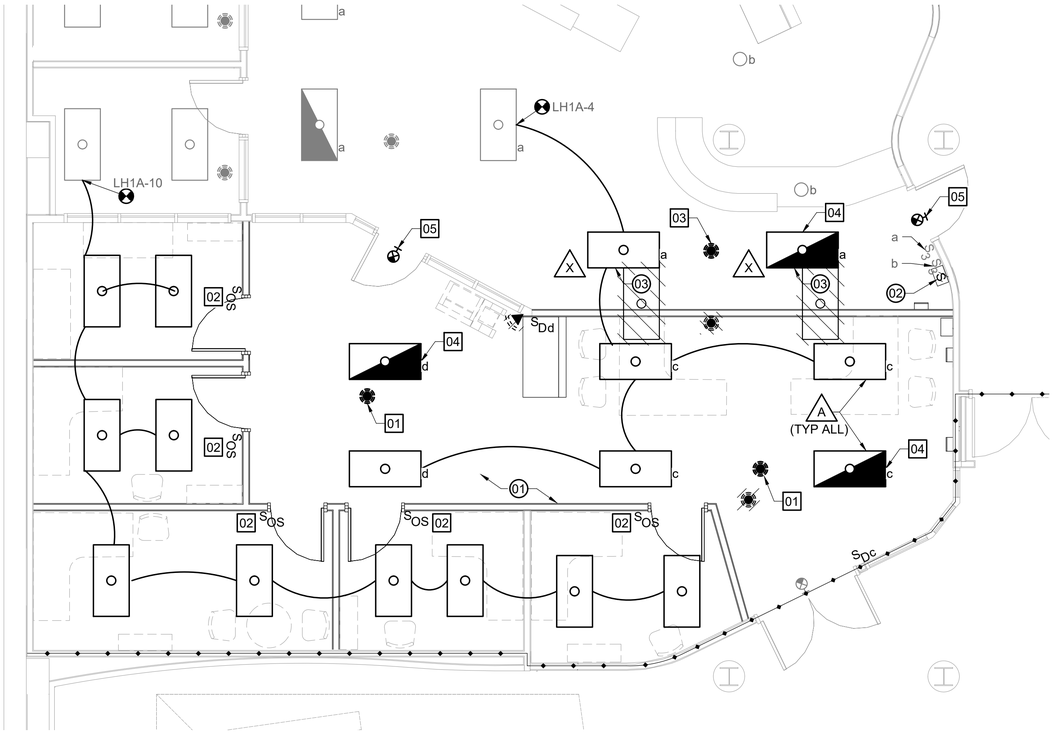

PLAN NORTH

FIRST FLOOR LIGHTING PLAN

SCALE: 1/4" = 1'-0"

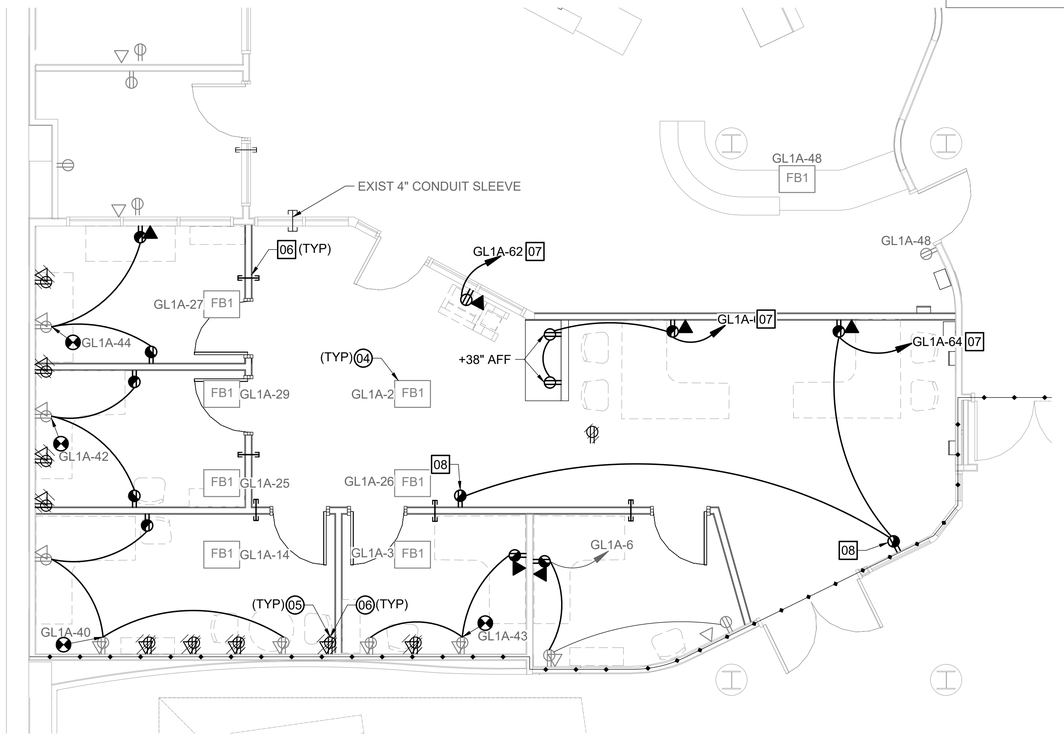

PLAN NORTH

FIRST FLOOR POWER AND TELECOM PLAN

SCALE: 1/4" = 1'-0"

GENERAL NOTES

1. SEE ARCHITECTURAL FOR ADDITIONAL COORDINATION ITEMS.
2. PROVIDE LIGHTING AND RECEPTACLE CONTROL COMPONENTS AND WIRING TO ACHIEVE CONTROL DESCRIPTION HEREIN. COMPONENTS NOT SPECIFICALLY SHOWN, THAT ARE NECESSARY FOR A COMPLETE WORKING INSTALLATION, SHALL BE PROVIDED AT NO EXTRA COST.
3. NOT ALL DEVICES OR EQUIPMENT MAY BE SHOWN. ITEMS NOT INDICATED FOR DEMOLITION ARE EXISTING TO REMAIN AND SHALL BE PROTECTED DURING CONSTRUCTION. MAINTAIN CONTINUITY OF SERVICE TO ALL SUCH ITEMS.
4. PROVIDE LABEL FOR EACH RECEPTACLE FACEPLATE INDICATING PANEL AND CIRCUIT NUMBER WHERE FED FROM.
5. ELECTRICAL ROOM 117 IS GYPSUM BOARD WALLS WITH CEILING EXPOSED TO STRUCTURE. CORRIDOR 100B IS GYPSUM BOARD WALLS WITH DROP CEILING THROUGHOUT. WALLS ARE NON-FIRE-RATED, UNLESS INDICATED OTHERWISE.
6. PROVIDE FIRESTOPPING PER DETAIL A/E-001 WHERE CONDUIT PENETRATES FIRE-RATED WALLS. FOR NEW RECESSED BOXES IN FIRE-RATED WALLS, PROVIDE INTUMESCENT PUTTY PAD ASSEMBLIES LISTED FOR FIRE RATING OF WALL AND GAUGE AND DIMENSIONS OF WALL BOX. COMPLY WITH LISTING AND MANUFACTURER'S INSTALLATION INSTRUCTIONS.

DEMOLITION NOTES

01 EXISTING CEILING IN THIS SPACE TO BE DEMOLISHED, SEE ARCHITECTURAL DRAWINGS FOR EXTENTS OF CEILING DEMOLITION. DEMOLISH EXISTING LIGHT FIXTURES AND CONTROLS. RETAIN EMERGENCY AND NORMAL POWER LIGHTING CIRCUIT HOMERUNS FOR REUSE.

02 DEMOLISH EXISTING LIGHT SWITCH.

03 RELOCATE EXISTING LIGHTING FIXTURE AS SHOWN. EXTEND EXISTING NORMAL POWER OR EMERGENCY LIGHTING CIRCUIT IN AREA AS INDICATED.

04 FLOOR BOX EXISTING TO REMAIN. PROTECT DURING CONSTRUCTION.

05 DEMOLISH RECEPTACLES AND DATA OUTLETS IN WALLS INDICATED FOR DEMOLITION AND AS INDICATED HEREIN. RETAIN HOMERUNS TO PANEL GL1A FOR REUSE.

06 PATCH AND REPAIR ALL FIRESTOPPING DAMAGED DURING DEMOLITION. WHERE RECESSED-MOUNTED BOXES ARE INDICATED FOR DEMOLITION, FIRE-RATING OF ASSEMBLY MUST BE PRESERVED. PATCH USING TYPE X GYPSUM BOARD SECURED TO FRAMING. COMPLY WITH GYPSUM BOARD MANUFACTURER'S INSTRUCTIONS FOR PATCHING FIRE-RATED PARTITIONS AND WITH SECTION 017300. COORDINATE ANY REQUIRED INSPECTION OF PATCH WITH OWNER.

NEW WORK NOTES

01 OCCUPANCY CONTROL IN THIS SPACE SHALL BE AUTOMATIC ON TO 50% BRIGHTNESS, AUTOMATIC OFF AFTER 20 MINUTES OF VACANCY. PROVIDE DIMMER SWITCHES ADJACENT TO DOORS TO CONTROL FIXTURES AS INDICATED.

02 PROVIDE OCCUPANCY SENSOR SWITCH WITH DIMMER ADJACENT TO DOOR. OCCUPANCY CONTROL IN THIS SPACE SHALL BE MANUAL ON, AUTOMATIC OFF AFTER 20 MINUTES OF VACANCY.

03 TIE NEW OCCUPANCY SENSOR INTO EXISTING LIGHTING CONTROLS SERVING SPACE.

04 CONNECT TO EXISTING EMERGENCY LIGHTING CIRCUIT IN AREA. REUSE EXISTING WIRING RETAINED FROM DEMOLITION WHEREVER PRACTICAL. WHERE DIMMER SWITCH IS INDICATED IN SPACE, PROVIDE EMERGENCY CONTROL RELAY(S) TO ILLUMINATE EMERGENCY FIXTURES TO FULL BRIGHTNESS UPON LOSS OF NORMAL POWER.

05 PROVIDE NEW EXIT SIGN WITH DIRECTIONAL CHEVRONS AS INDICATED. CONNECT TO EXISTING EXIT SIGN CIRCUIT IN AREA.

06 PROVIDE CONDUIT SLEEVE FOR WIRING PROVIDED BY OTHERS. FILL EMPTY SPACE IN SLEEVE WITH ACOUSTICAL SEALANT.

07 SEE FIRST FLOOR KEY PLAN THIS SHEET FOR TYPICAL ROUTING OF NEW HOMERUNS TO PANEL GL1A.

08 PROVIDE SINGLE CONTROLLED DUPLEX RECEPTACLE ONLY.

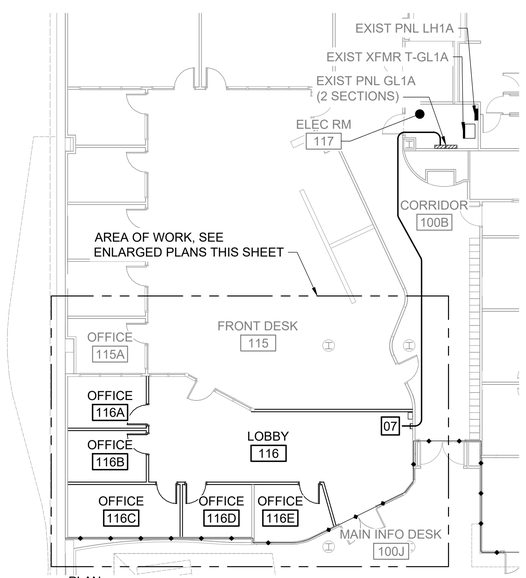

PLAN NORTH

FIRST FLOOR KEY PLAN

SCALE: 3/32" = 1'-0"

3/32"=1'-0" 0' 5' 10' 15' 32'

1/4"=1'-0" 0' 1' 4' 8' 12'

CLIENT	NVCC
JOB NO.	25-0296
DATE	05/15/2026
SCALE	DST AS NOTED
DRAWN	DEH
DESIGN	DEH
APPROVED	KDS
Q.C. REVIEW	DST

NO.	REVISIONS	DATE

BROCKENBROUGH
A Stratus Team Company
1011 Boulder Springs Drive, Suite 200 | Richmond, VA 23225
804.592.3900 *main* | 804.592.3901 *fax*
www.brockenbrough.com

FIRST FLOOR ELECTRICAL PLANS

AN CA RENOVATE TESTING & WORKFORCE OFFICE

DEB PROJECT CODE: 260-B5260-054
VCCS PROJECT CODE: L24NV599

ANNANDALE VIRGINIA

COMMONWEALTH OF VIRGINIA
DUSTIN THIESSE
Lic. No. 052289
05/15/2026
PROFESSIONAL ENGINEER

SHEET 11 OF 12

E-101

FILE NAME: P:\ABA\25 Jobs\25-0296 CA Renovate Testing & Workforce Office - Annandale Campus NVCCC\ADE\E-101 FIRST FLOOR ELECTRICAL PLANS.dwg LAYOUT NAME: E-101 FIRST FLOOR ELECTRICAL PLANS PLOTTED: Thursday, May 14, 2026 - 11:09am USER: fieldcamp

EXISTING PANELBOARD GL1A SCHEDULE

150 A, MAIN CIRCUIT BREAKER, 208Y/120-VOLT, 3 PHASE, 4 WIRE, 10 kAIC, SURFACE MOUNT, W/ 200% NEUTRAL BUS AND TVSS

DESCRIPTION	CB	CKT	LOAD (kVA)					PHASE			LOAD (kVA)					CKT	CB	DESCRIPTION
			LTG	RCPT	HVAC	MTR	MISC	A	B	C	LTG	RCPT	HVAC	MTR	MISC			
RCPT FRONT DESK 115	20	1	-	-	-	-	-	0.0			-	-	-	-	-	2	20	RCPT FLOOR LOBBY 116
RCPT FLOOR OFFICE 116D	20	3	-	-	-	-	-		0.0		-	-	-	-	-	4	20	RCPT RM 124, 124A
RCPT FRONT DESK 115	20	5	-	-	-	-	-			0.7	-	0.72	-	-	-	6	20	RCPT OFFICE 116E
F-7, EWC-1, HRP-1, JH-7	20	7	-	-	-	-	-	0.0			-	-	-	-	-	8	20	RCPT RM 114A,114M,114N
RCPT RM 115E, 115F, 115G	20	9	-	-	-	-	-		0.0		-	-	-	-	-	10	-	SPACE
RCPT RM 151, 152, 155	20	11	-	-	-	-	-			0.0	-	-	-	-	-	12	20	RCPT 114B,114C,161,162
RCPT RM 153, 154, 159	20	13	-	-	-	-	-	0.0			-	-	-	-	-	14	20	RCPT FLOOR OFFICE 116C
RCPT TEST CENTER 115H	20	15	-	-	-	-	-		0.0		-	-	-	-	-	16	20	RCPT TEST CENTER 115I
RCPT TEST CENTER 115I	20	17	-	-	-	-	-			0.0	-	-	-	-	-	18	20	RCPT TEST CENTER 115I
RCPT TEST CENTER 115I	20	19	-	-	-	-	-	0.0			-	-	-	-	-	20	20	RCPT TEST CENTER 115H
RCPT TEST CENTER 115H	20	21	-	-	-	-	-		0.0		-	-	-	-	-	22	20	RCPT TEST CENTER 115H
RCPT TEST CENTER 115I	20	23	-	-	-	-	-			0.0	-	-	-	-	-	24	20	RCPT TEST CENTER 115H
RCPT FLOOR OFFICE 116B	20	25	-	-	-	-	-	0.0			-	-	-	-	-	26	20	RCPT FLOOR OFFICE 116D
RCPT FLOOR OFFICE 116A	20	27	-	-	-	-	-		0.0		-	-	-	-	-	28	20	RCPT TEST CENTER 115I
RCPT FLOOR OFFICE 116B	20	29	-	-	-	-	-			0.0	-	-	-	-	-	30	20	RCPT TEST CENTER 115I
RCPT TEST CENTER 115I	20	31	-	-	-	-	-	0.0			-	-	-	-	-	32	20	RCPT TEST CENTER 115I
RCPT TEST CENTER 115I	20	33	-	-	-	-	-		0.0		-	-	-	-	-	34	20	RCPT TEST CENTER 115I
RCPT TEST CENTER 115I	20	35	-	-	-	-	-			0.0	-	-	-	-	-	36	20	RCPT TEST CENTER 115I
RCPT TEST CENTER 115I	20	37	-	-	-	-	-	0.0			-	-	-	-	-	38	20	RCPT TEST CENTER 115H
RCPT TEST CENTER 115H	20	39	-	-	-	-	-		0.5		-	0.54	-	-	-	40	20	RCPT OFFICE 116C
RCPT TEST CENTER 115H	20	41	-	-	-	-	-			0.9	-	0.90	-	-	-	42	20	RCPT OFFICE 116B
RCPT OFFICE 116D	20	43	-	0.72	-	-	-	1.6			-	0.90	-	-	-	44	20	RCPT OFFICE 116A
RCPT TEST CENTER 115H	20	45	-	-	-	-	-		0.0		-	-	-	-	-	46	20	RCPT RM 114D, 113B
RCPT TEST CENTER 115I	20	47	-	-	-	-	-			0.0	-	-	-	-	-	48	20	RCPT FRONT DESK 115
RCPT BREAK RM 150	20	49	-	-	-	-	-	0.0			-	-	-	-	-	50	20	RCPT RM 148, 149, 151
RCPT RM 156, 157, 158	20	51	-	-	-	-	-		0.0		-	-	-	-	-	52	20	RCPT 114K,114J,114H,100E
RCPT RM 159, 160, 161	20	53	-	-	-	-	-			0.0	-	-	-	-	-	54	20	RCPT RM 115C,115D,115E
RCPT RM 114G, 114L	20	55	-	-	-	-	-	0.0			-	-	-	-	-	56	20	RCPT RM 113, 113C, 100H
RCPT RM 113, 113A, 114L	20	57	-	-	-	-	-		0.0		-	-	-	-	-	58	20	RCPT FRONT DESK 114
RCPT RM 114B, 114F, 114E	20	59	-	-	-	-	-			0.0	-	-	-	-	-	60	20	RCPT 100B,116,117,118,120
RCPT DESK 114, 114P	20	61	-	-	-	-	-	1.0			-	-	-	-	0.96	62	20	COPIER RCPT LOBBY 116
RCPT LOBBY 116E	20	63	-	1.08	-	-	-		1.8		-	0.72	-	-	-	64	20	RCPT LOBBY 116
SPARE	20	65	-	-	-	-	-			0.0	-	-	-	-	-	66	20	RCPT RECRUIT 116
SYS FURN F. AID/INTL	20	67	-	-	-	-	-	0.0			-	-	-	-	-	68	20	RCPT HI-BAY 113A, 114P
SYS FURN F. AID/INTL	20	69	-	-	-	-	-		0.0		-	-	-	-	-	70	20	WALL RCPT M.WAVE
EMS	20	71	-	-	-	-	-			0.0	-	-	-	-	-	72	20	EMS
EMS	20	73	-	-	-	-	-	0.0			-	-	-	-	-	74	20	EMS
SPARE	20	75	-	-	-	-	-		0.0		-	-	-	-	-	76	20	PWR POLE
FRONT DESK OUTLETS	20	77	-	-	-	-	-			0.0	-	-	-	-	-	78	20	RCPT VENDING MACHINE
FRONT DESK OUTLETS	20	79	-	-	-	-	-	0.0			-	-	-	-	-	80	-	SPACE
FRONT DESK PRINTER	20	81	-	-	-	-	-		0.0		-	-	-	-	-	82	-	SPACE
SPACE	-	83	-	-	-	-	-			0.0	-	-	-	-	-	84	-	SPACE
								2.6	2.3	1.6								

LOAD DESCRIPTION	CONNECTED		DEMAND	
DEMO RCPT	-1800	VA	-900	VA
NEW RCPT	3600	VA	1800	VA
NEW MISC	960	VA	960	VA
NET ADDED LOAD ON GL1A	2760	VA	1860	VA
@ 208V, 3Ø	8	A	5	A

GENERAL NOTES

1. CONTRACTOR SHALL VERIFY SPARES AND TRACE AND CONFIRM ALL LOAD DESCRIPTIONS AND PROVIDE TYPEWRITTEN DIRECTORY ACCORDINGLY. USE OWNER'S FINAL SPACE DESIGNATIONS. CIRCUITS CANNOT BE LEFT WITH 'UNKNOWN' AS A LOAD DESCRIPTION. SUBMIT FINAL SCHEDULE TO ENGINEER FOR APPROVAL BEFORE INSTALLATION.
4. LOADS SHOWN IN SCHEDULES INDICATE FINAL LOADS ON CIRCUITS AFFECTED BY THE WORK. EXISTING LOADS AND LOADS REMOVED BY DEMOLITION ARE ESTIMATED BASED ON 2011 RECORD DRAWINGS PROVIDED BY OWNER. VERIFY LOADING OF ALL CIRCUITS AFFECTED BY THE WORK AND CONTACT ENGINEER WITH ALL CONFLICTS.
5. PANEL GL1A IS A TWO-SECTION PANEL. SPACES 1 THROUGH 42 ARE IN SECTION 1 AND SPACES 43 THROUGH 84 ARE IN SECTION 2.

EXISTING PANELBOARD LH1A SCHEDULE

250 A, MAIN LUGS ONLY, 480Y/277-VOLT, 3 PHASE, 4 WIRE, 10 kAIC, SURFACE MOUNT

DESCRIPTION	CB	CKT	LOAD (kVA)					PHASE			LOAD (kVA)					CKT	CB	DESCRIPTION
			LTG	RCPT	HVAC	MTR	MISC	A	B	C	LTG	RCPT	HVAC	MTR	MISC			
LTG CORR 100B, 100I	20	1	-	-	-	-	-	0.0			-	-	-	-	-	2	20	LTG CE & CREDIT RED 114A
LTG MECH AREA	20	3	-	-	-	-	-		1.0		0.98	-	-	-	-	4	20	LTG 115A, 115
LTG 118, 120	20	5	-	-	-	-	-			0.0	-	-	-	-	-	6	20	LTG 100D, 100J, 100K
LTG FRONT DESK 114	20	7	-	-	-	-	-	0.0			-	-	-	-	-	8	20	LTG 157-162, 114B, 114C
SITE LTG	20	9	-	-	-	-	-		1.8		1.77	-	-	-	-	10	20	LTG 115B-115I
SITE LTG	20	11	-	-	-	-	-			18.6	-	16.38	-	-	2.20	12	80	PNL GL1A VIA XFMR T-GL1A
SITE LTG	20	13	-	-	-	-	-	16.7			-	15.66	-	-	1.00	14		
SPARE	20	15	-	-	-	-	-		17.6		-	16.38	-	-	1.20	16		
SPARE	20	17	-	-	-	-	-			0.0	-	-	-	-	-	18	20	SPARE
SPARE	20	19	-	-	-	-	-	0.0			-	-	-	-	-	20	20	SPARE
SPARE	20	21	-	-	-	-	-		0.0		-	-	-	-	-	22	20	SPARE
SPARE	20	23	-	-	-	-	-			0.0	-	-	-	-	-	24	20	SPARE
SPACE	20	25	-	-	-	-	-	0.0			-	-	-	-	-	26	-	SPACE
SPACE	-	27	-	-	-	-	-		0.0		-	-	-	-	-	28	-	SPACE
SPACE	-	29	-	-	-	-	-			0.0	-	-	-	-	-	30	-	SPACE
SPACE	-	31	-	-	-	-	-	0.0			-	-	-	-	-	32	-	SPACE
SPACE	-	33	-	-	-	-	-		0.0		-	-	-	-	-	34	-	SPACE
SPACE	-	35	-	-	-	-	-			0.0	-	-	-	-	-	36	-	SPACE
SPACE	-	37	-	-	-	-	-	0.0			-	-	-	-	-	38	-	SPACE
SPACE	-	39	-	-	-	-	-		0.0		-	-	-	-	-	40	-	SPACE
SPACE	-	41	-	-	-	-	-			0.0	-	-	-	-	-	42	-	SPACE
								16.7	20.3	18.6								

LOAD DESCRIPTION	CONNECTED		DEMAND	
DEMO LTG	-488	VA	-610	VA
NEW LTG	644	VA	805	VA
NET ADDED LOAD ON GL1A	2490	VA	1860	VA
NET ADDED LOAD ON LH1A	2646	VA	2055	VA
@ 480V, 3Ø	3	A	2	A

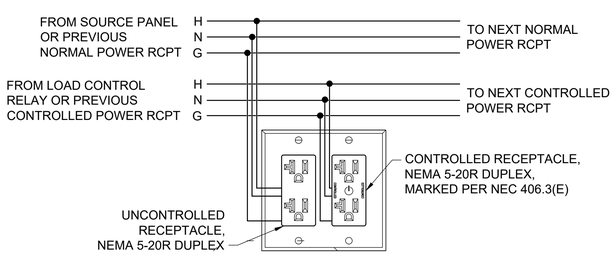

CONTROLLED DEVICES SHALL TURN OFF AFTER 20 MINUTES OF VACANCY. OCCUPANCY DETECTION SHALL BE PROVIDED BY SPACE LIGHTING OCCUPANCY CONTROLS. PROVIDE POWER PACKS OR LOAD CONTROL RELAYS AS NECESSARY TO ACCOMPLISH THIS FUNCTIONALITY.

SPLIT-CONTROLLED RECEPTACLE DETAIL

A / E-601 | E-601 SCALE: NONE

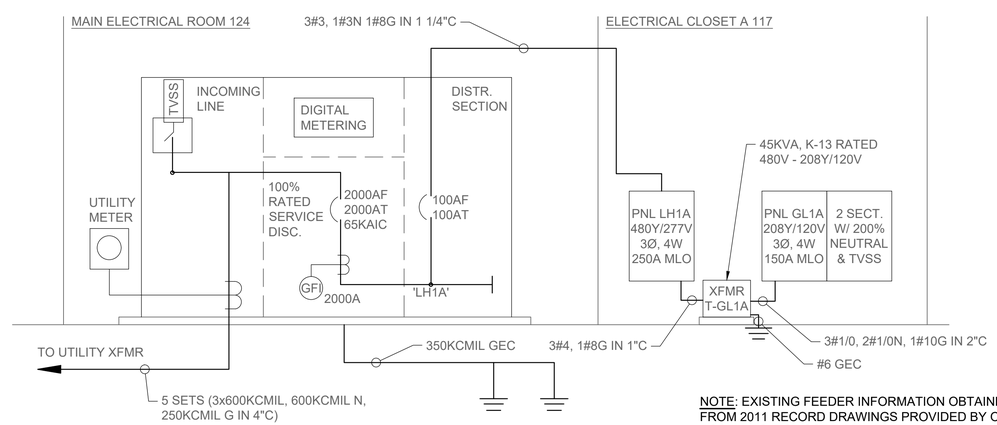

NOTE: EXISTING FEEDER INFORMATION OBTAINED FROM 2011 RECORD DRAWINGS PROVIDED BY OWNER, BCOM PROJECT CODE 260-17387.

PARTIAL POWER RISER DIAGRAM

SCALE: NONE

CLIENT NVCC | JOB NO. 25-0296 | DATE 05/15/2026 | SCALE DST AS NOTED
DRAWN DEH | DESIGN DEH | APPROVED KDS | Q.C. REVIEW DST

NO.	REVISIONS	DATE

BROCKENBROUGH
A Stratus Team Company
1011 Boulder Springs Drive, Suite 200 | Richmond, VA 23225
804.592.3900 *main* | 804.592.3901 *fax*
www.brockenbrough.com

SCHEDULES

AN CA RENOVATE TESTING & WORKFORCE OFFICE
DEB PROJECT CODE: 260-B5260-054
VCCS PROJECT CODE: L24NV599

ANNANDALE VIRGINIA

COMMONWEALTH OF VIRGINIA
DUSTIN THIESSE
Lic. No. 052289
05/15/2026
PROFESSIONAL ENGINEER

SHEET 12 OF 12

E-601

FILE NAME: P:\ABA25 Jobs\25-0296 CA Renovate Testing & Workforce Office - Annandale Campus NVCC\CAD\E-601 SCHEDULES.dwg LAYOUT NAME: E-601 SCHEDULES PLOTTED: Thursday, May 14, 2026 - 11:10am USER: ffeldump